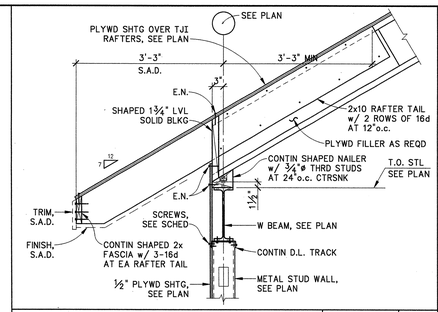

SECTION — SCALE: 3/4" = 1'-0" — KPFF K0000 — **1** S6.1

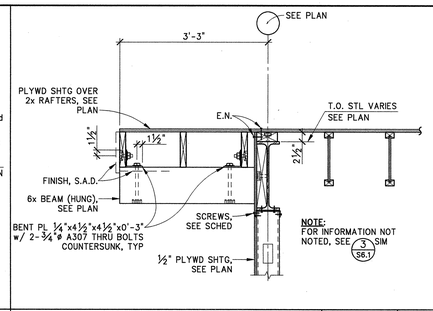

SECTION — SCALE: 3/4" = 1'-0" — KPFF K0000 — **2** S6.1

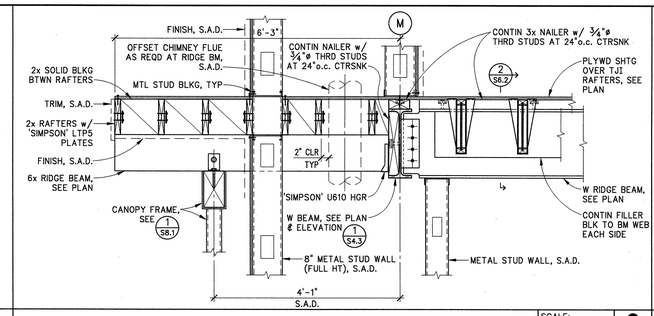

DETAIL — SCALE: 3/4" = 1'-0" — KPFF K0000 — **3** S6.1

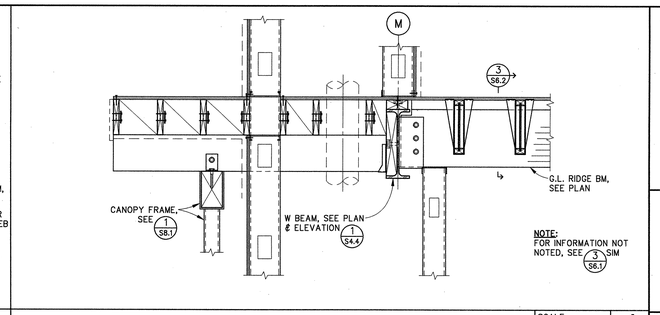

DETAIL — SCALE: 3/4" = 1'-0" — KPFF K0000 — **4** S6.1

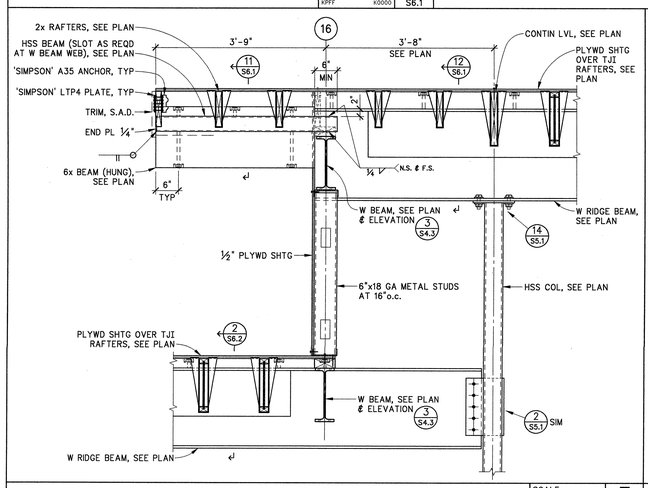

DETAIL — SCALE: 3/4" = 1'-0" — KPFF K0000 — **5** S6.1

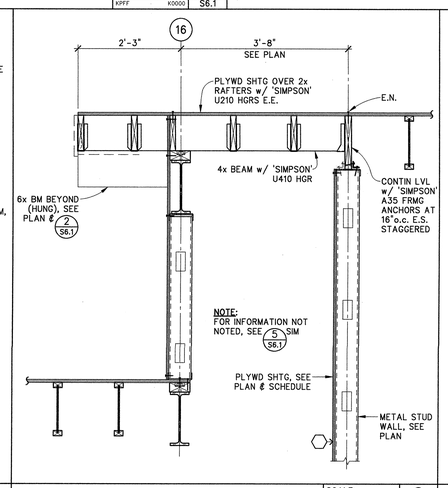

SECTION — SCALE: 3/4" = 1'-0" — KPFF K0000 — **6** S6.1

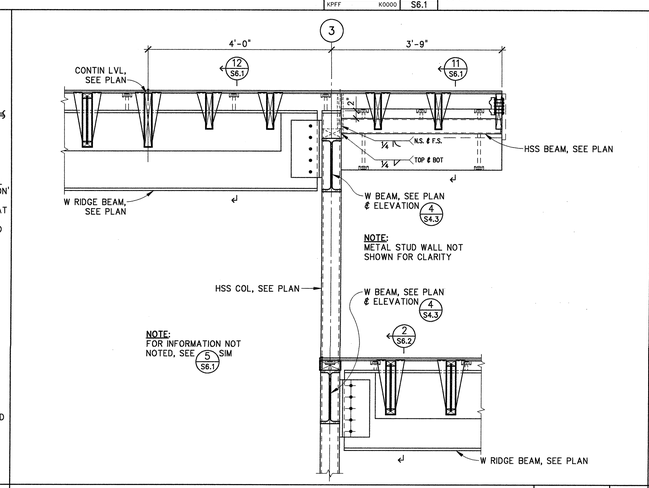

DETAIL — SCALE: 3/4" = 1'-0" — KPFF K0000 — **7** S6.1

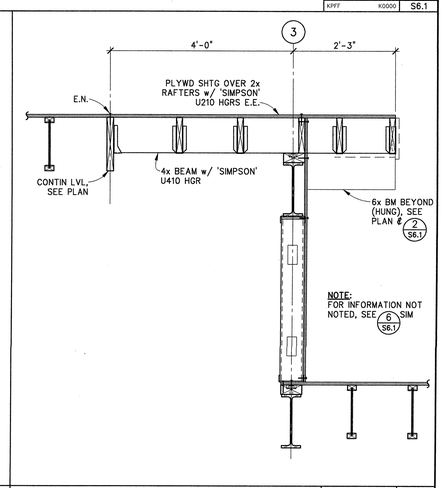

SECTION — SCALE: 3/4" = 1'-0" — KPFF K0000 — **8** S6.1

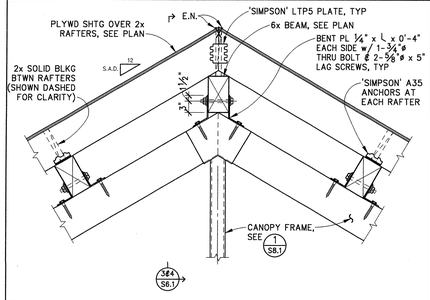

DETAIL — SCALE: 3/4" = 1'-0" — KPFF K0000 — **9** S6.1

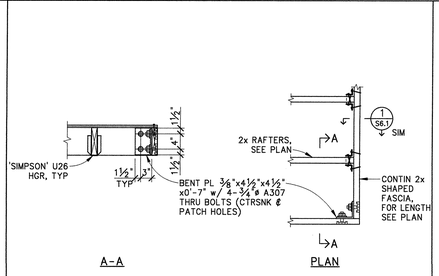

TYP EAVE CORNER CONN

DETAIL — SCALE: 3/4" = 1'-0" — KPFF K0000 — **10** S6.1

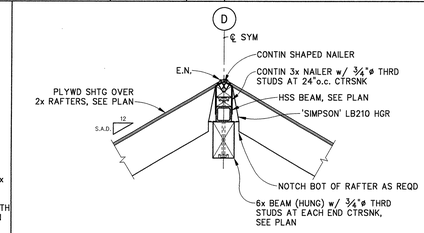

RIDGE

SECTION — SCALE: 3/4" = 1'-0" — KPFF K0000 — **11** S6.1

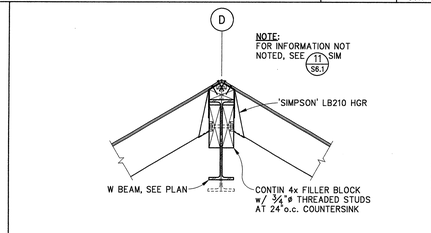

RIDGE

SECTION — SCALE: 3/4" = 1'-0" — KPFF K0000 — **12** S6.1

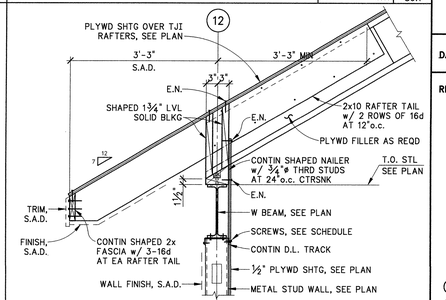

SECTION — SCALE: 3/4" = 1'-0" — KPFF K0000 — **13** S6.1

REGISTERED PROFESSIONAL ENGINEER — No. 2436 — Exp. 3/31/07 — STRUCTURAL — STATE OF CALIFORNIA

18 APRIL 2005
DATE SIGNED

kpff
Consulting Engineers
1160 Battery Street, Suite 300
San Francisco, California 94111
T: 415.989.1004 F: 415.989.1552
www.kpff.com ftp.kpff.com

MOUNTAIN VIEW SENIOR CENTER

266 ESCUELA AVE
MOUNTAIN VIEW, CA

DATE: APRIL 18, 2005

REVISIONS:

CONSTRUCTION SET

SHEET TITLE:

ROOF FRAMING DETAILS

DRAWN BY: FC
CHECKED BY: TLH
JOB NO: K103044

SHEET S6.1

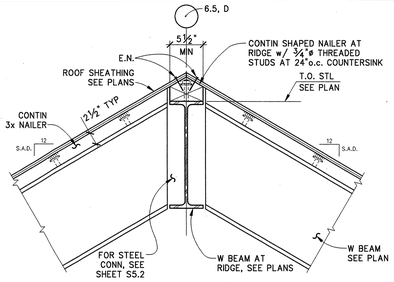

W BEAM AT RIDGE

SECTION — SCALE: 1" = 1'-0" — KPFF K0000 — **1** S6.2

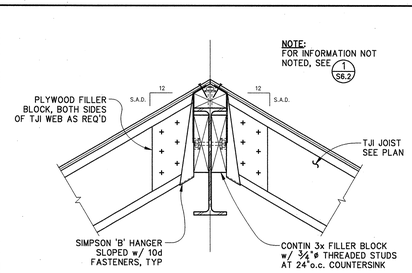

TJI TO W BEAM CONN

SECTION — SCALE: 1" = 1'-0" — KPFF K0000 — **2** S6.2

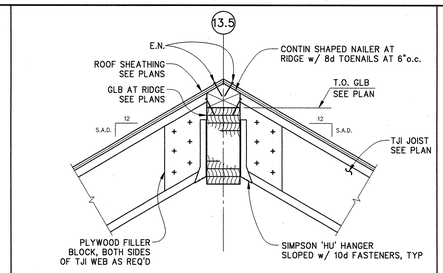

TJI TO GLB CONN

SECTION — SCALE: 1" = 1'-0" — KPFF K0000 — **3** S6.2

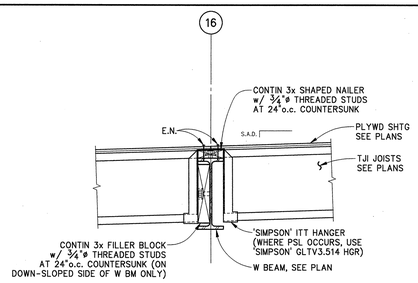

SECTION — SCALE: 1" = 1'-0" — KPFF K0000 — **4** S6.2

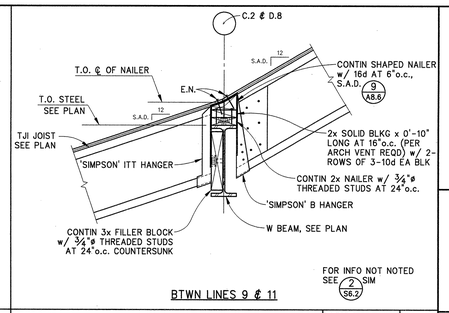

BTWN LINES 9 ℄ 11

SECTION — SCALE: 1" = 1'-0" — KPFF K0000 — **5** S6.2

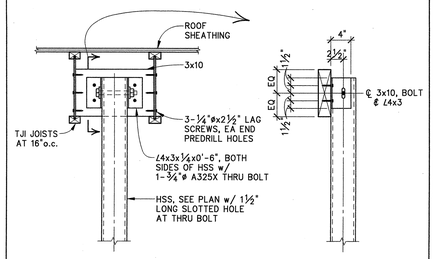

DETAIL — SCALE: 1" = 1'-0" — KPFF K0000 — **6** S6.2

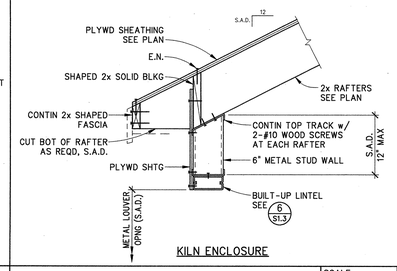

KILN ENCLOSURE

SECTION — SCALE: 1" = 1'-0" — KPFF K0000 — **7** S6.2

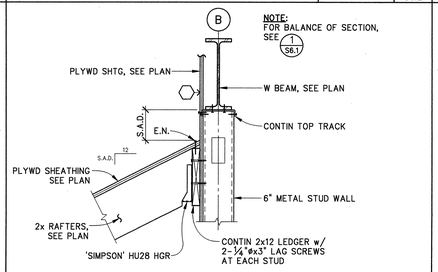

KILN ENCLOSURE

SECTION — SCALE: 1" = 1'-0" — KPFF K0000 — **8** S6.2

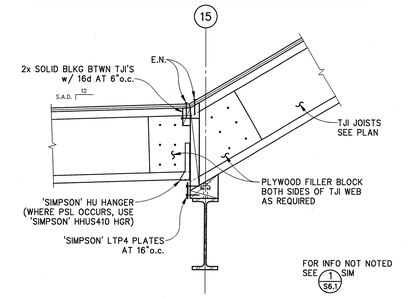

SECTION — SCALE: 1" = 1'-0" — KPFF K0000 — **9** S6.2

REGISTERED PROFESSIONAL ENGINEER — TIMOTHY L. HEMMER — No. 2436 — Exp. 3/31/07 — STRUCTURAL — STATE OF CALIFORNIA

18 APRIL 2005
DATE SIGNED

kpff
Consulting Engineers
1160 Battery Street, Suite 300
San Francisco, California 94111
T: 415.989.1004 F: 415.989.1552
www.kpff.com ftp.kpff.com

MOUNTAIN VIEW SENIOR CENTER

266 ESCUELA AVE
MOUNTAIN VIEW, CA

DATE: APRIL 18, 2005

REVISIONS:

CONSTRUCTION SET

SHEET TITLE:
ROOF FRAMING DETAILS

DRAWN BY: FC
CHECKED BY: TLH
JOB NO: K103044

SHEET
S6.2

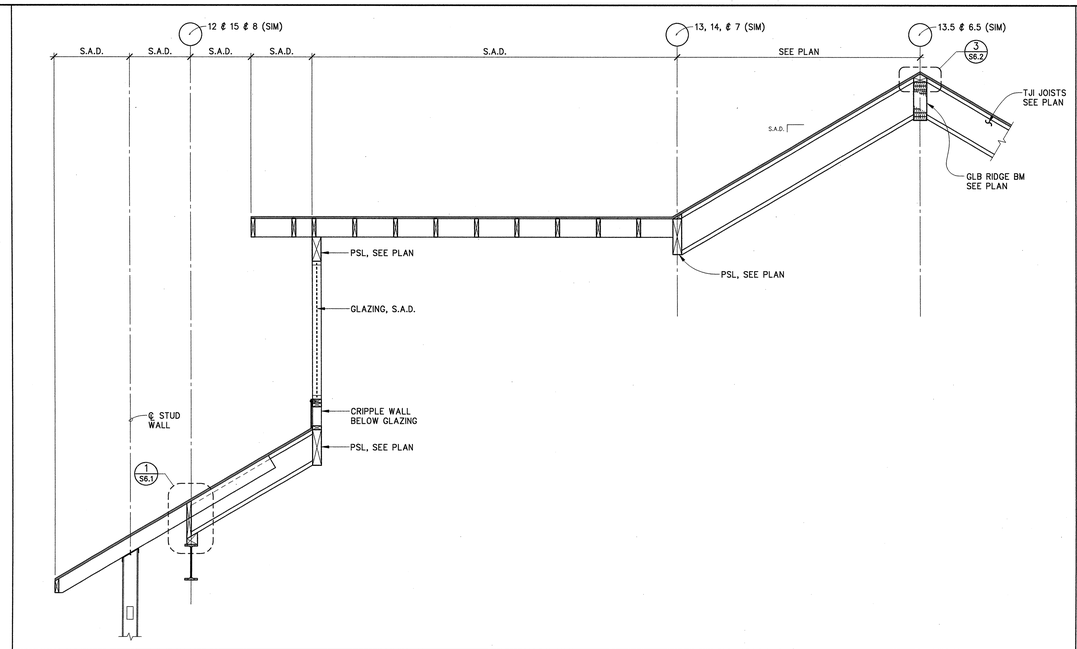

SECTION — SCALE: 1/2" = 1'-0" — 1 S6.3

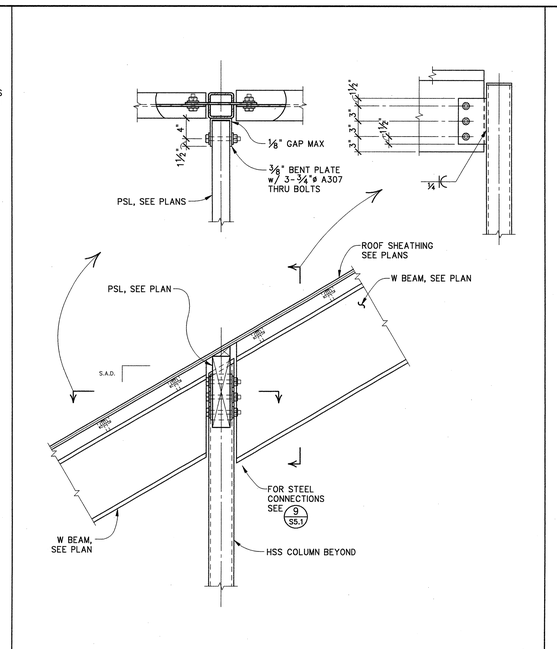

SECTION — SCALE: 1" = 1'-0" — 2 S6.3

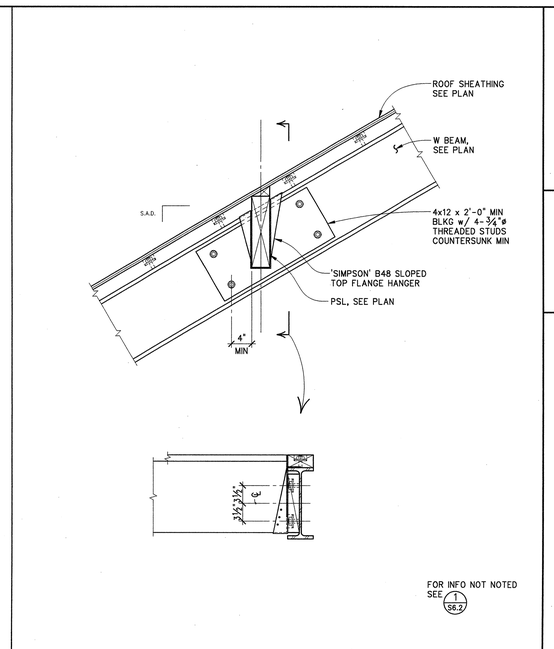

SECTION — SCALE: 1" = 1'-0" — 3 S6.3

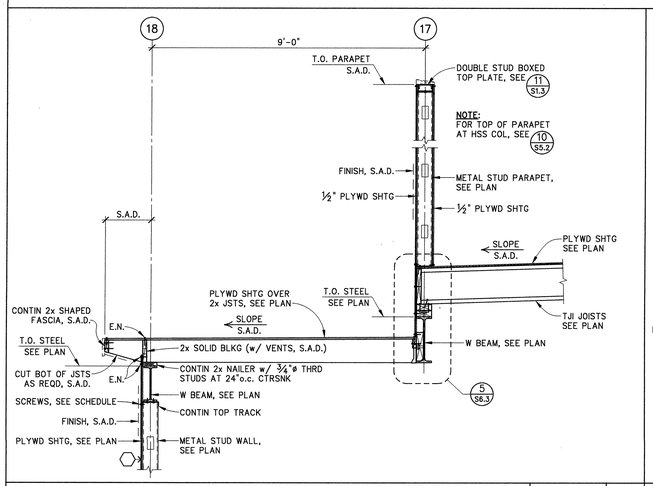

SECTION — SCALE: 1/2" = 1'-0" — 4 S6.3

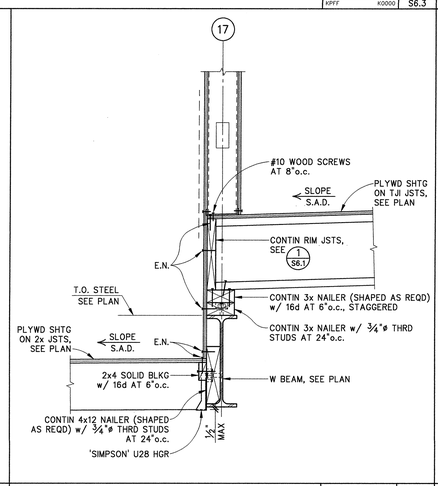

SECTION — SCALE: 1" = 1'-0" — 5 S6.3

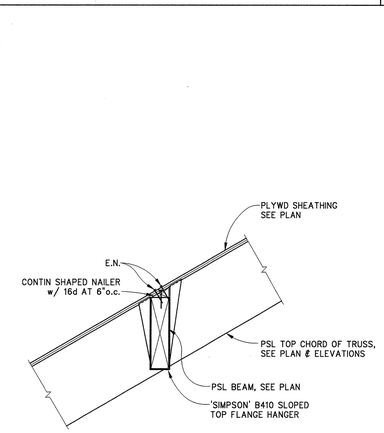

BM TO TRUSS CONN

DETAIL — SCALE: 1" = 1'-0" — 6 S6.3

NOT USED — SCALE: NONE — 7 S6.3

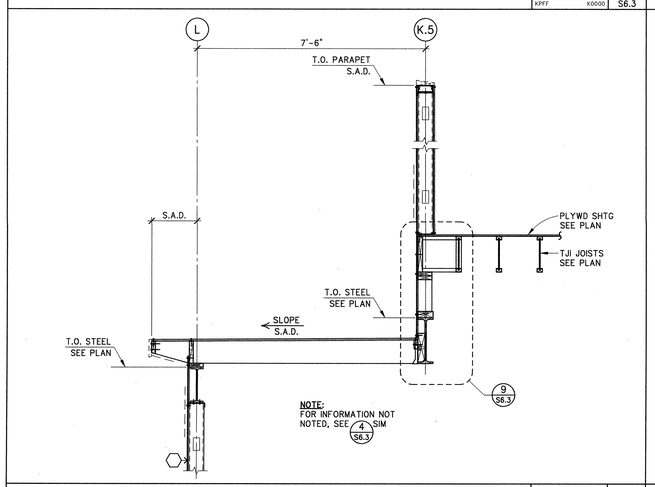

SECTION — SCALE: 1/2" = 1'-0" — 8 S6.3

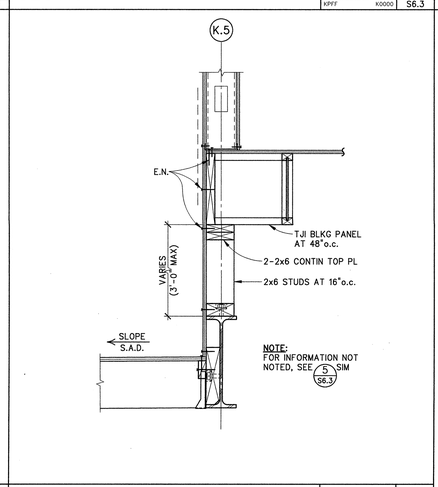

SECTION — SCALE: 1" = 1'-0" — 9 S6.3

REGISTERED PROFESSIONAL ENGINEER — JOEL HEWITT — No. 2436 — Exp. 3/31/07 — STRUCTURAL — STATE OF CALIFORNIA

18 APRIL 2005
DATE SIGNED

kpff
Consulting Engineers
1160 Battery Street, Suite 300
San Francisco, California 94111
T: 415.989.1004 F: 415.989.1552
www.kpff.com ftp.kpff.com

MOUNTAIN VIEW SENIOR CENTER

266 ESCUELA AVE
MOUNTAIN VIEW, CA

DATE: APRIL 18, 2005

REVISIONS:

CONSTRUCTION SET

SHEET TITLE:
ROOF FRAMING DETAILS

DRAWN BY: BV
CHECKED BY: TLH
JOB NO: K103044

SHEET S6.3