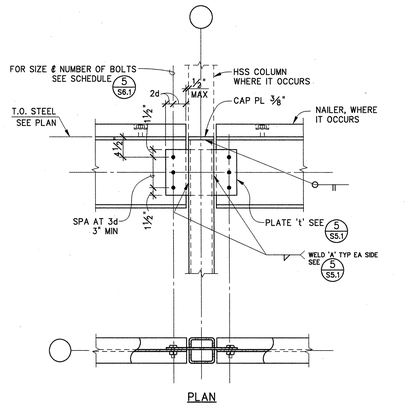

TYPICAL INTERIOR

DETAIL — SCALE: 1" = 1'-0" — KPFF K0000 — 1 S5.1

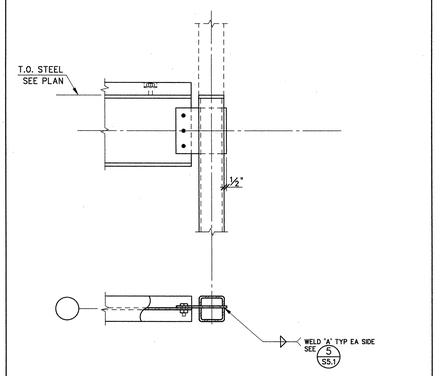

TYPICAL END

DETAIL — SCALE: 1" = 1'-0" — KPFF K0000 — 2 S5.1

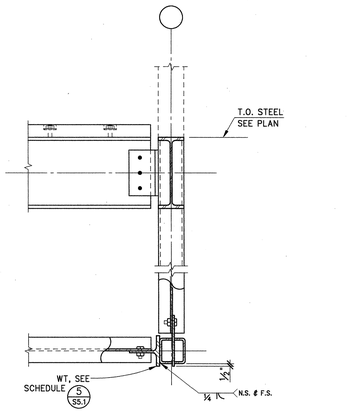

TYPICAL CORNER

DETAIL — SCALE: 1" = 1'-0" — KPFF K0000 — 3 S5.1

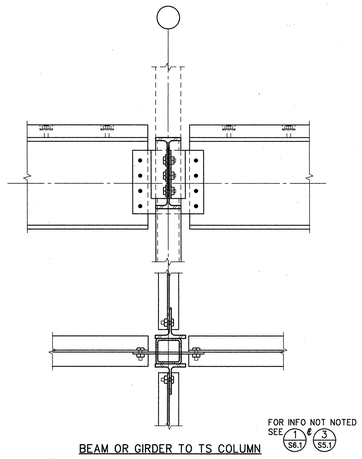

BEAM OR GIRDER TO TS COLUMN

DETAIL — SCALE: 1" = 1'-0" — KPFF K0000 — 4 S5.1

MEMBER SIZE	CONNECTION				REMARKS
	SHEAR PL 't'	WT	NUMBER OF A325X BOLTS	WELD 'A'	
W14	⅜"	WT8x22.5	3-¾"ø	¼"	
W18	⅜"	WT8x22.5	4-¾"ø	¼"	
W21	⅜"	WT8x22.5	5-¾"ø	¼"	
W24	7/16"	WT8x28.5	6-¾"ø	¼"	

SCHEDULE — SCALE: NONE — KPFF T6310 — 5 S5.1

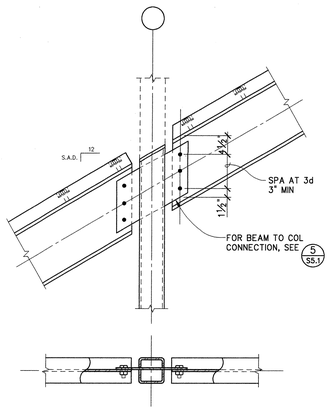

TYPICAL SLOPED INTERIOR

FOR INFO NOTED SEE 1/S5.1 & 2/S5.1 & 6/S5.1

DETAIL — SCALE: 1" = 1'-0" — KPFF K0000 — 6 S5.1

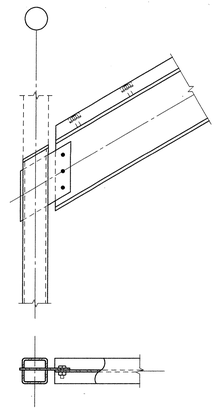

TYPICAL SLOPED END

FOR INFO NOTED SEE 1/S5.1 & 2/S5.1 & 6/S5.1

DETAIL — SCALE: 1" = 1'-0" — KPFF K0000 — 7 S5.1

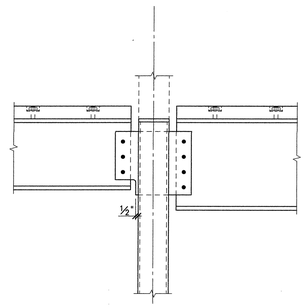

FOR INFO NOT NOTED SEE 1/S5.1

DETAIL — SCALE: 1" = 1'-0" — KPFF K0000 — 8 S5.1

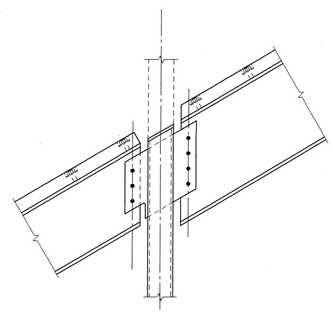

FOR INFO NOTED SEE 1/S5.1 & 6/S5.1

DETAIL — SCALE: 1" = 1'-0" — KPFF K0000 — 9 S5.1

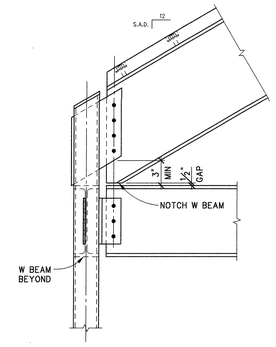

FOR INFO NOTED SEE 1/S5.1 & 4/S5.1 & 7/S5.1

DETAIL — SCALE: 1" = 1'-0" — KPFF K0000 — 10 S5.1

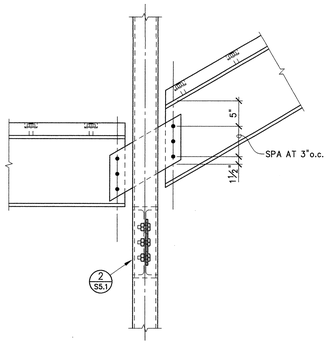

FOR INFO NOTED SEE 6/S5.1

DETAIL — SCALE: 1" = 1'-0" — KPFF K0000 — 11 S5.1

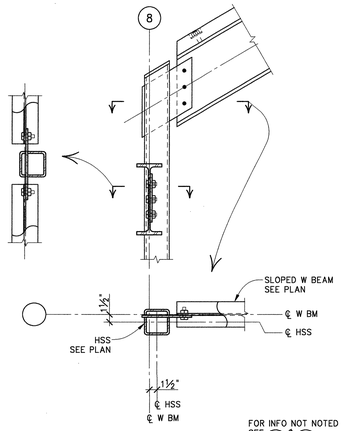

BEAM OR GIRDER TO TS COLUMN

FOR INFO NOT NOTED SEE 4/S5.1 & 7/S5.1

DETAIL AT 8/J, 8/K — SCALE: 1" = 1'-0" — KPFF K0000 — 12 S5.1

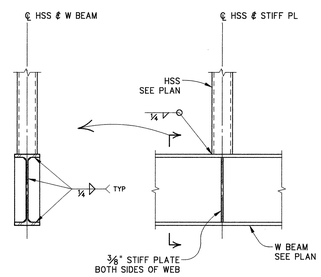

DETAIL — SCALE: 1" = 1'-0" — KPFF K0000 — 13 S5.1

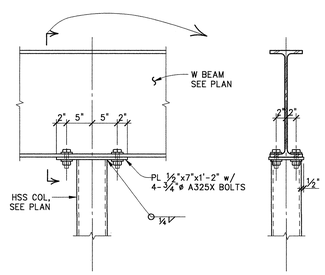

DETAIL — SCALE: 1" = 1'-0" — KPFF K0000 — 14 S5.1

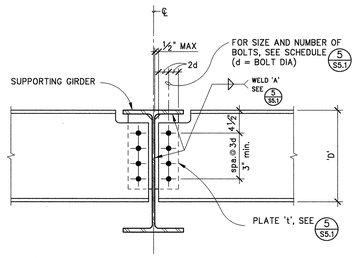

TWO-SIDED CONNECTION, BEAM TO BEAM

DETAIL — SCALE: 1" = 1'-0" — KPFF K5032 — 15 S5.1

STRUCTURAL ENGINEER — STATE OF CALIFORNIA — No. S2436 — Exp. 3/31/07

18 APRIL 2005
DATE SIGNED

kpff
Consulting Engineers
1160 Battery Street, Suite 300
San Francisco, California 94111
T: 415.989.1004 F: 415.989.1552
www.kpff.com ftp.kpff.com

MOUNTAIN VIEW SENIOR CENTER

266 ESCUELA AVE
MOUNTAIN VIEW, CA

DATE: APRIL 18, 2005

REVISIONS:

CONSTRUCTION SET

SHEET TITLE:

STEEL FRAMING CONNECTION DETAILS

DRAWN BY: BV
CHECKED BY: TLH
JOB NO: K103044

SHEET S5.1

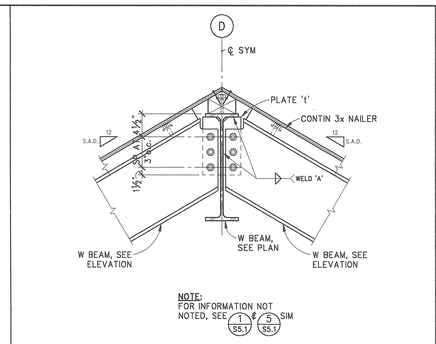

RIDGE CONN (LINES D/9, 11 ℄ 16)

DETAIL — SCALE: 1" = 1'-0" — KPFF K0000 — 1 S5.2

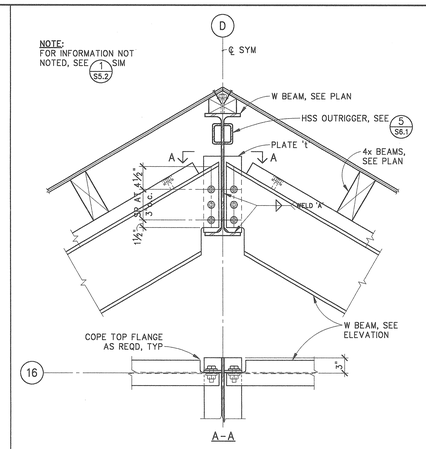

RIDGE CONN (LINE D/16)

DETAIL — SCALE: 1" = 1'-0" — KPFF K0000 — 2 S5.2

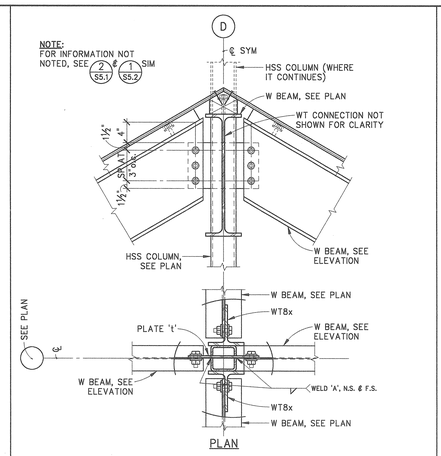

RIDGE CONN (LINES D/3, 12 ℄ 18)

DETAIL — SCALE: 1" = 1'-0" — KPFF K0000 — 3 S5.2

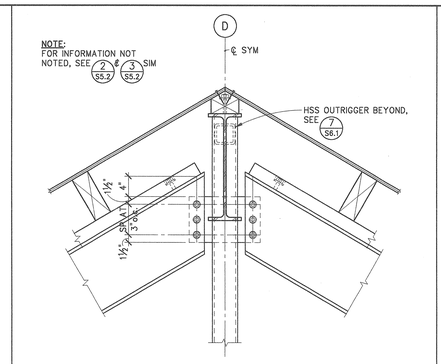

RIDGE CONN (LINE D/3)

DETAIL — SCALE: 1" = 1'-0" — KPFF K0000 — 4 S5.2

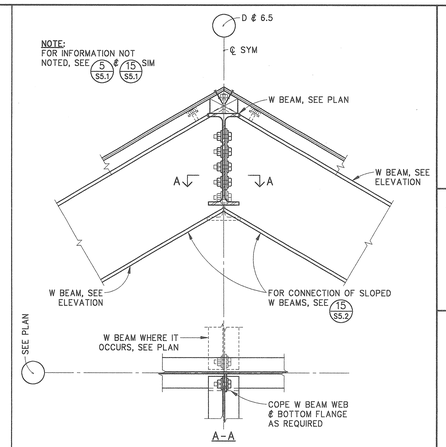

RIDGE CONN (LINES D/2 ℄ 19, 6.5/J, K ℄ M)

DETAIL — SCALE: 1" = 1'-0" — KPFF K0000 — 5 S5.2

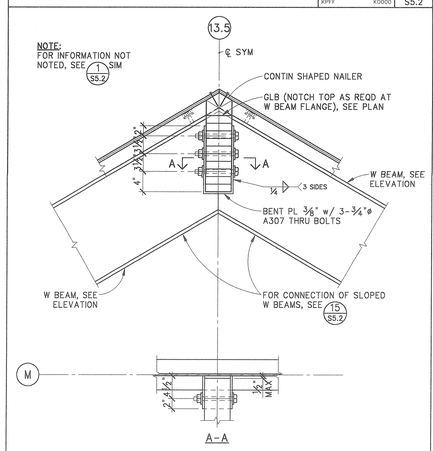

RIDGE CONN (LINE M/13.5)

DETAIL — SCALE: 1" = 1'-0" — KPFF K0000 — 6 S5.2

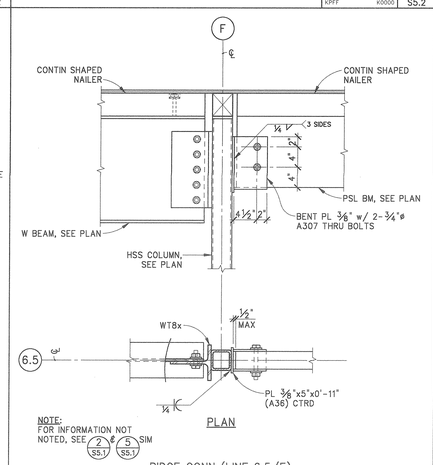

RIDGE CONN (LINE 6.5/F)

DETAIL — SCALE: 1" = 1'-0" — KPFF K0000 — 7 S5.2

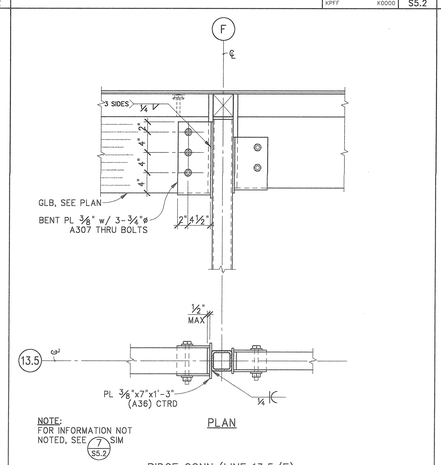

RIDGE CONN (LINE 13.5/F)

DETAIL — SCALE: 1" = 1'-0" — KPFF K0000 — 8 S5.2

NOT USED — SCALE: NONE — 9 S5.2

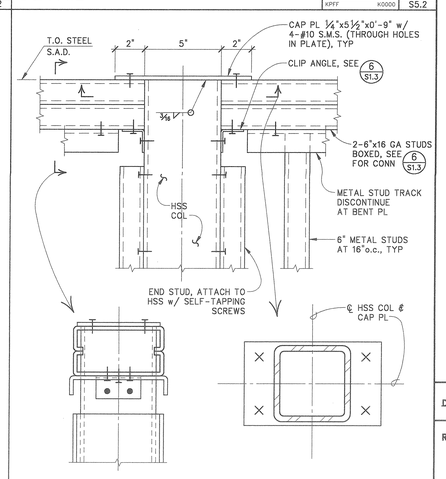

DETAIL AT TOP OF PARAPET — SCALE: 3" = 1'-0" — KPFF K0000 — 10 S5.2

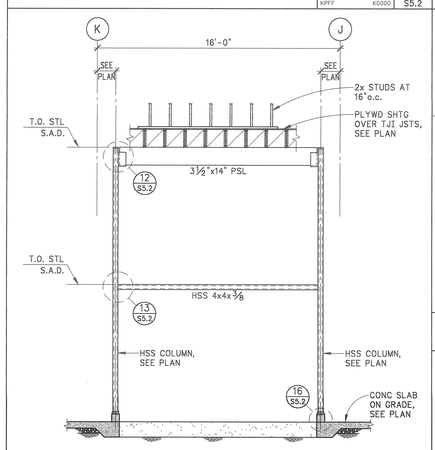

OFF LINE 5

ELEVATION — SCALE: 1/4" = 1'-0" — KPFF K0000 — 11 S5.2

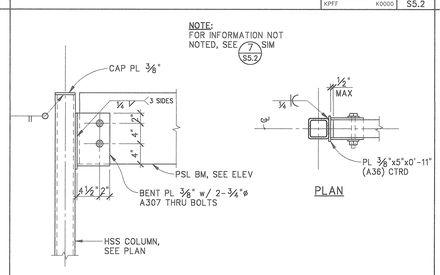

BM TO COL CONN

DETAIL — SCALE: 1" = 1'-0" — KPFF K0000 — 12 S5.2

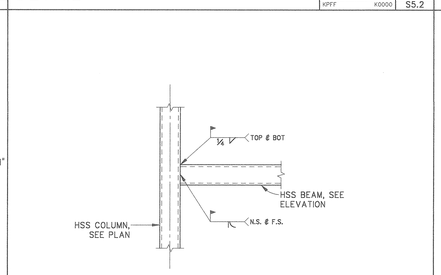

BM TO COL CONN

DETAIL — SCALE: 1" = 1'-0" — KPFF K0000 — 13 S5.2

NOT USED — SCALE: NONE — 14 S5.2

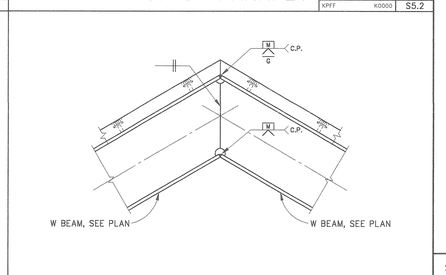

DETAIL — SCALE: NONE — KPFF K0000 — 15 S5.2

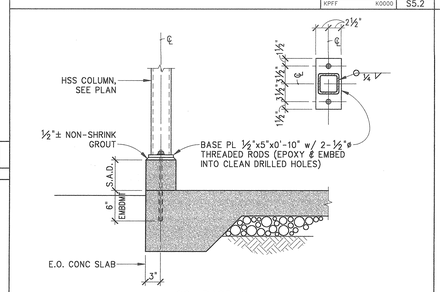

COL BASE CONN

DETAIL — SCALE: 1" = 1'-0" — KPFF K0000 — 16 S5.2

NOT USED — SCALE: NONE — 17 S5.2

NOT USED — SCALE: NONE — 18 S5.2

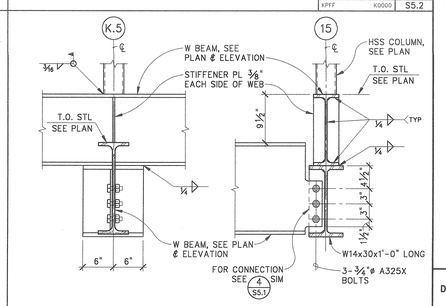

DETAIL — SCALE: 1" = 1'-0" — KPFF K0000 — 19 S5.2

REGISTERED PROFESSIONAL ENGINEER — TIM L. HEIMAN — No. 2436 — Exp. 3/31/07 — STRUCTURAL — STATE OF CALIFORNIA

18 APRIL 2005
DATE SIGNED

kpff
Consulting Engineers
1160 Battery Street, Suite 300
San Francisco, California 94111
T: 415.989.1004 F: 415.989.1552
www.kpff.com ftp.kpff.com

MOUNTAIN VIEW SENIOR CENTER

266 ESCUELA AVE
MOUNTAIN VIEW, CA

DATE: APRIL 18, 2005

REVISIONS:

CONSTRUCTION SET

SHEET TITLE:

STEEL FRAMING CONNECTION DETAILS

DRAWN BY: FC
CHECKED BY: TLH
JOB NO: K103044

SHEET S5.2