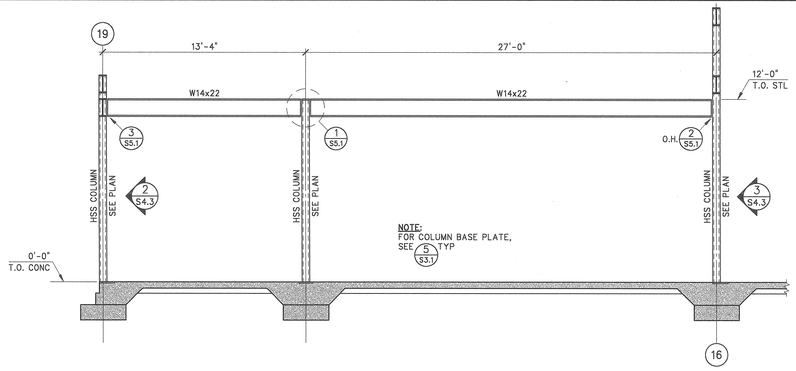

ELEVATION - LINE B

SCALE: 1/4" = 1'-0" | 1 | KPFF K0000 | S4.1

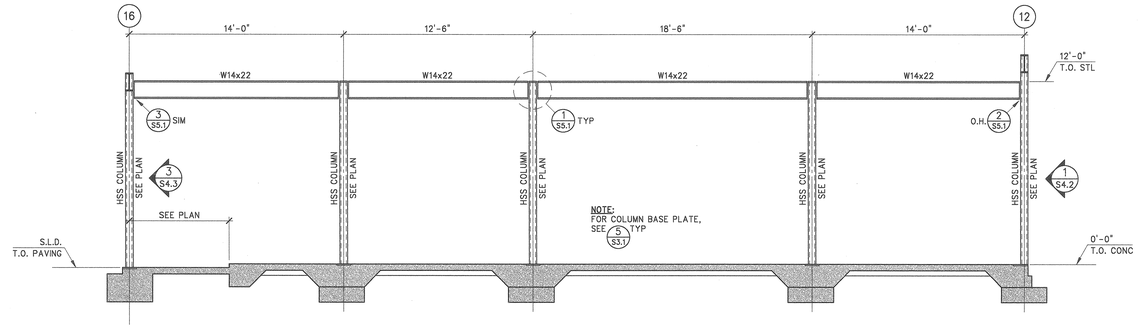

ELEVATION - LINE A

SCALE: 1/4" = 1'-0" | 2 | KPFF K0000 | S4.1

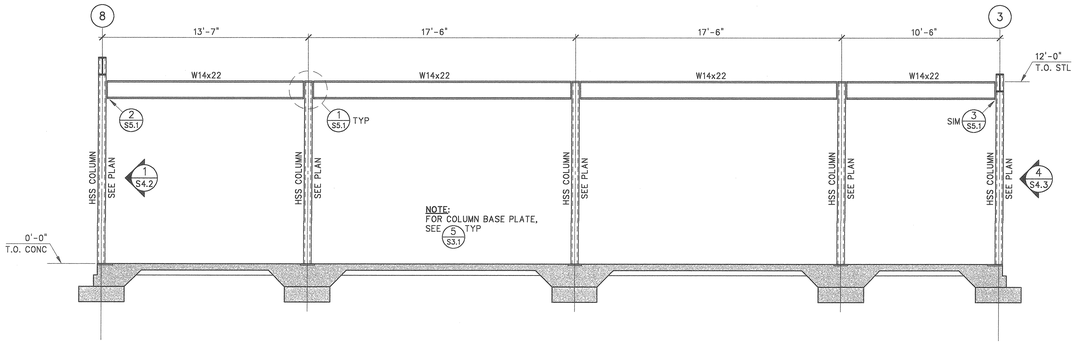

ELEVATION - LINE A

SCALE: 1/4" = 1'-0" | 3 | KPFF K0000 | S4.1

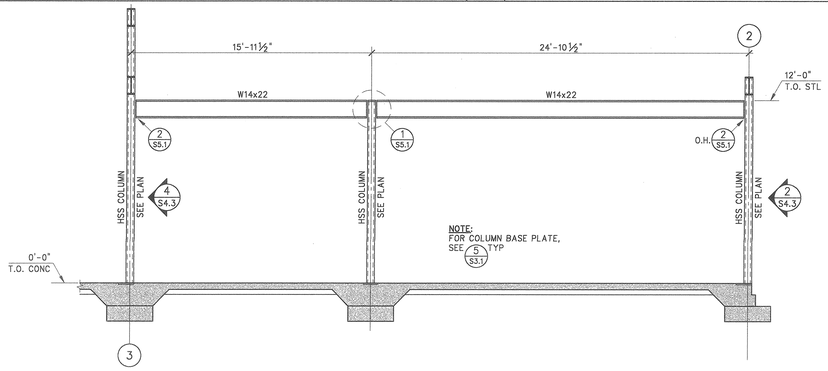

ELEVATION - LINE B

SCALE: 1/4" = 1'-0" | 4 | KPFF K0000 | S4.1

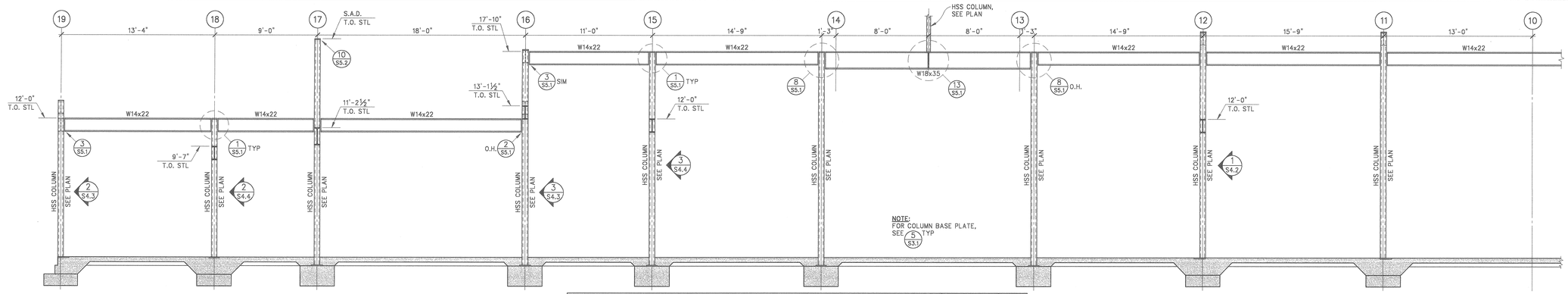

ELEVATION - LINE F

SCALE: 1/4" = 1'-0" | 5 | KPFF K0000 | S4.1

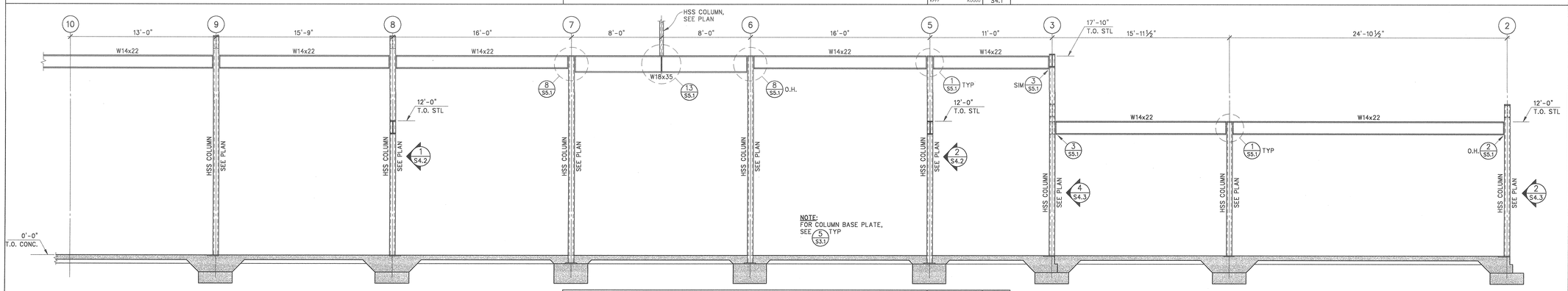

ELEVATION - LINE F

SCALE: 1/4" = 1'-0" | 6 | KPFF K0000 | S4.1

REGISTERED PROFESSIONAL ENGINEER
TIM L. HEMAN
No. 2436
Exp. 3/31/07
STRUCTURAL
STATE OF CALIFORNIA

18 APRIL 2005
DATE SIGNED

kpff
Consulting Engineers
1160 Battery Street, Suite 300
San Francisco, California 94111
T: 415.989.1004 F: 415.989.1552
www.kpff.com ftp.kpff.com

MOUNTAIN VIEW SENIOR CENTER

266 ESCUELA AVE
MOUNTAIN VIEW, CA

DATE: APRIL 18, 2005

REVISIONS:

CONSTRUCTION SET

SHEET TITLE:

STEEL FRAME ELEVATIONS

DRAWN BY: FC
CHECKED BY: TLH
JOB NO: K103044

SHEET
S4.1

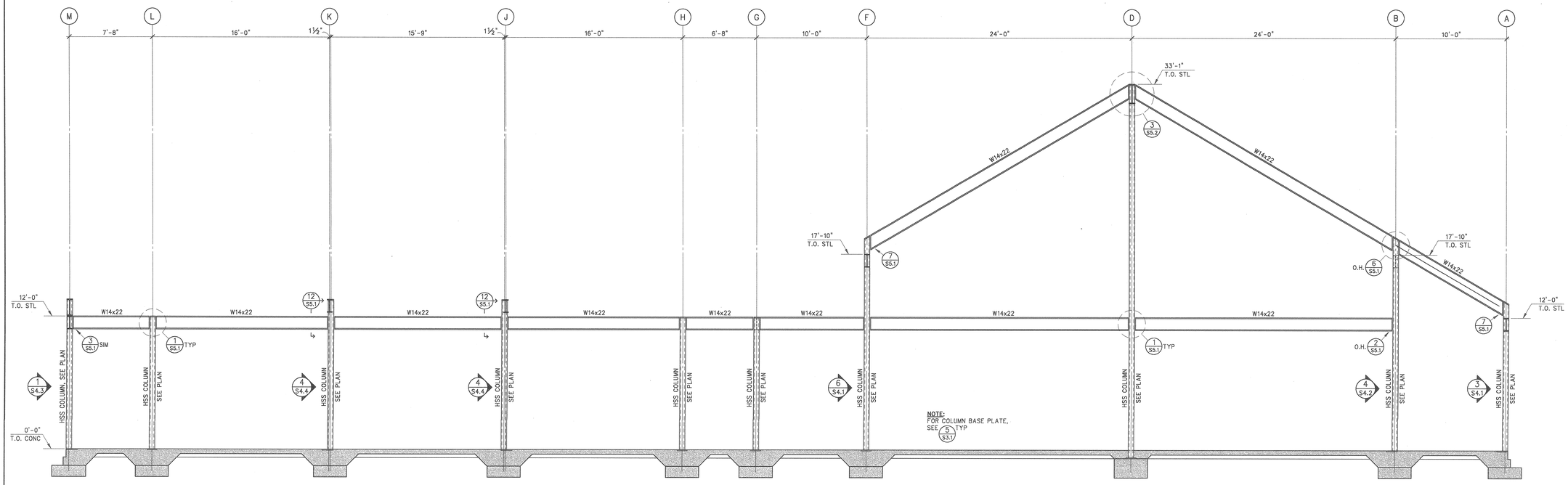

ELEVATION - LINE 8

SCALE: 1/4" = 1'-0" | 1 | KPFF K0000 S4.2

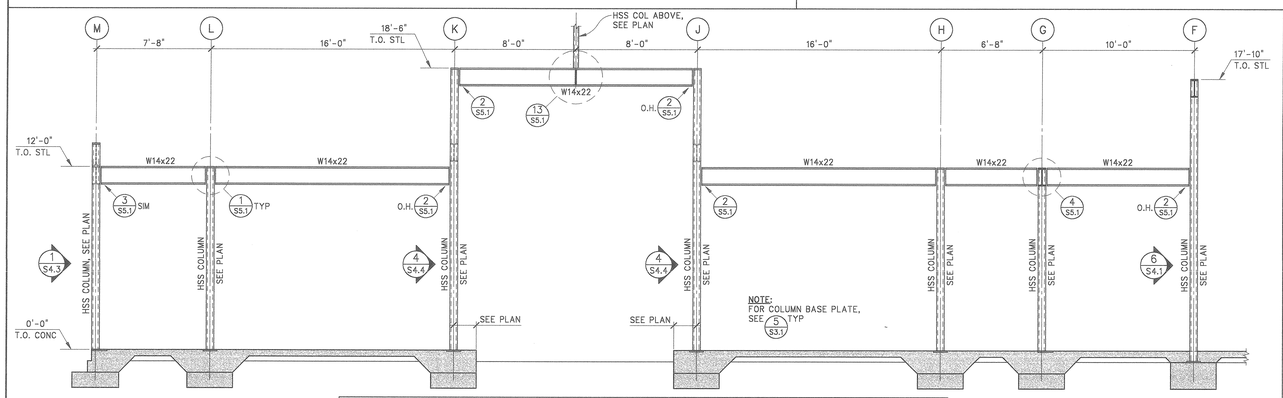

ELEVATION - LINE 5

SCALE: 1/4" = 1'-0" | 2 | KPFF K0000 S4.2

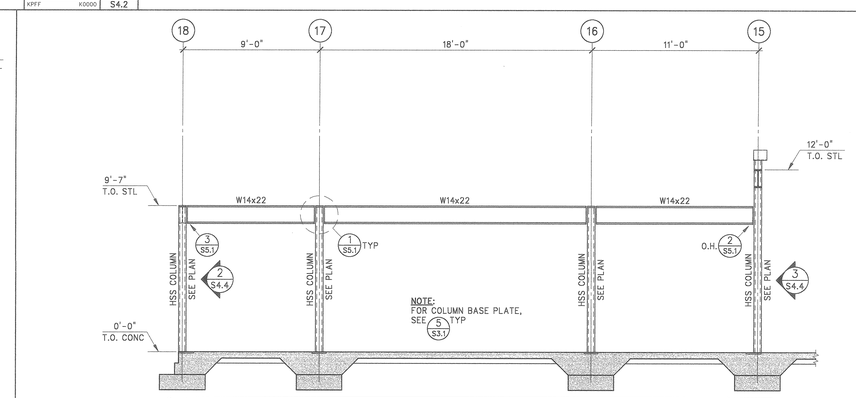

ELEVATION - LINE L

SCALE: 1/4" = 1'-0" | 3 | KPFF K0000 S4.2

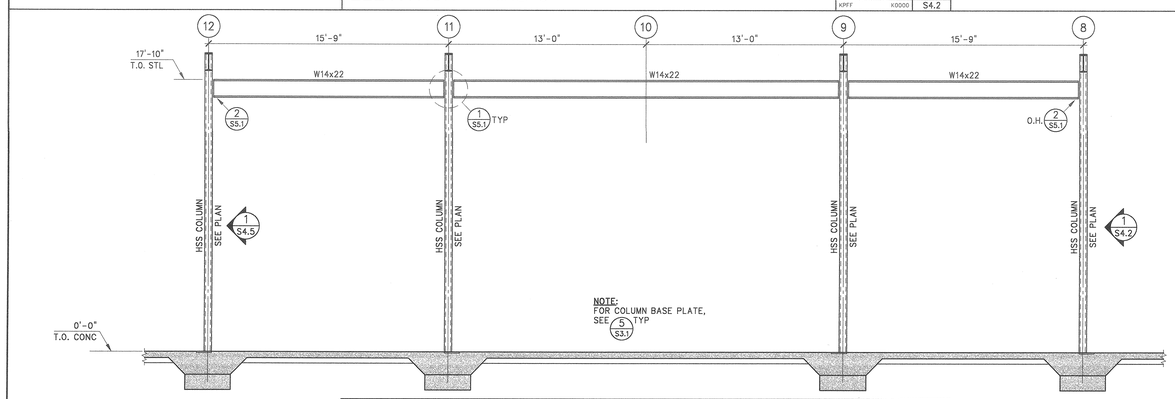

ELEVATION - LINE B

SCALE: 1/4" = 1'-0" | 4 | KPFF K0000 S4.2

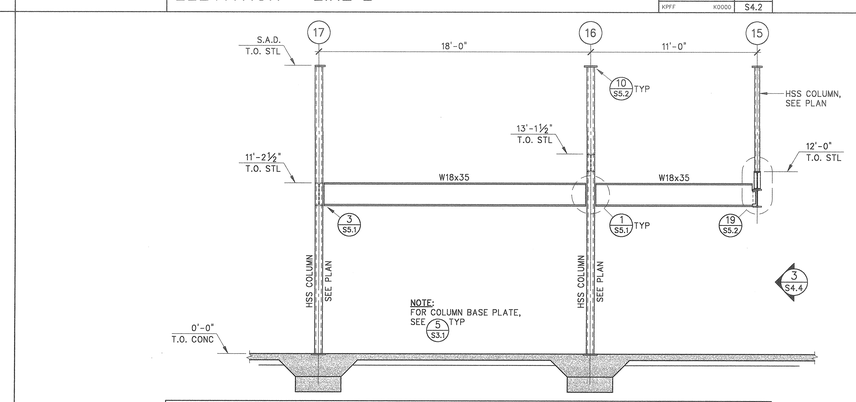

ELEVATION - LINE K.5

SCALE: 1/4" = 1'-0" | 5 | KPFF K0000 S4.2

REGISTERED PROFESSIONAL ENGINEER
TIM L. HEIMAN
No. 2436
Exp. 3/31/07
STRUCTURAL
STATE OF CALIFORNIA

18 APRIL 2005
DATE SIGNED

kpff
Consulting Engineers
1160 Battery Street, Suite 300
San Francisco, California 94111
T: 415.989.1004 F: 415.989.1552
www.kpff.com ftp.kpff.com

MOUNTAIN VIEW SENIOR CENTER

266 ESCUELA AVE
MOUNTAIN VIEW, CA

DATE: APRIL 18, 2005

REVISIONS:

CONSTRUCTION SET

SHEET TITLE:

STEEL FRAME ELEVATIONS

DRAWN BY: FC
CHECKED BY: TLH
JOB NO: K103044

SHEET S4.2

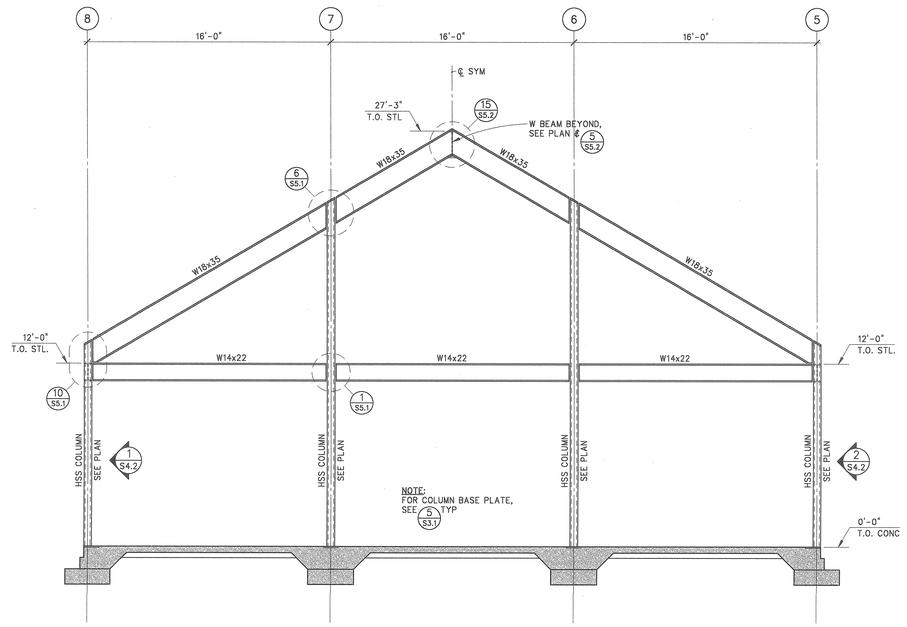

ELEVATION - LINE M

SCALE: 1/4" = 1'-0" | 1 | KPFF | K0000 | S4.3

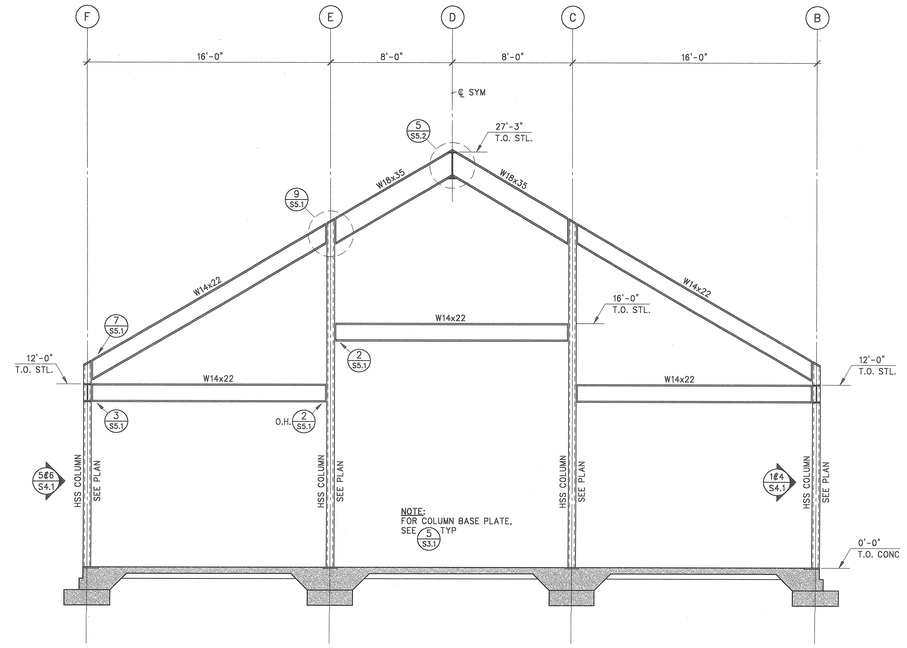

ELEVATION - LINE 19 (LINE 2 SIM)

SCALE: 1/4" = 1'-0" | 2 | KPFF | K0000 | S4.3

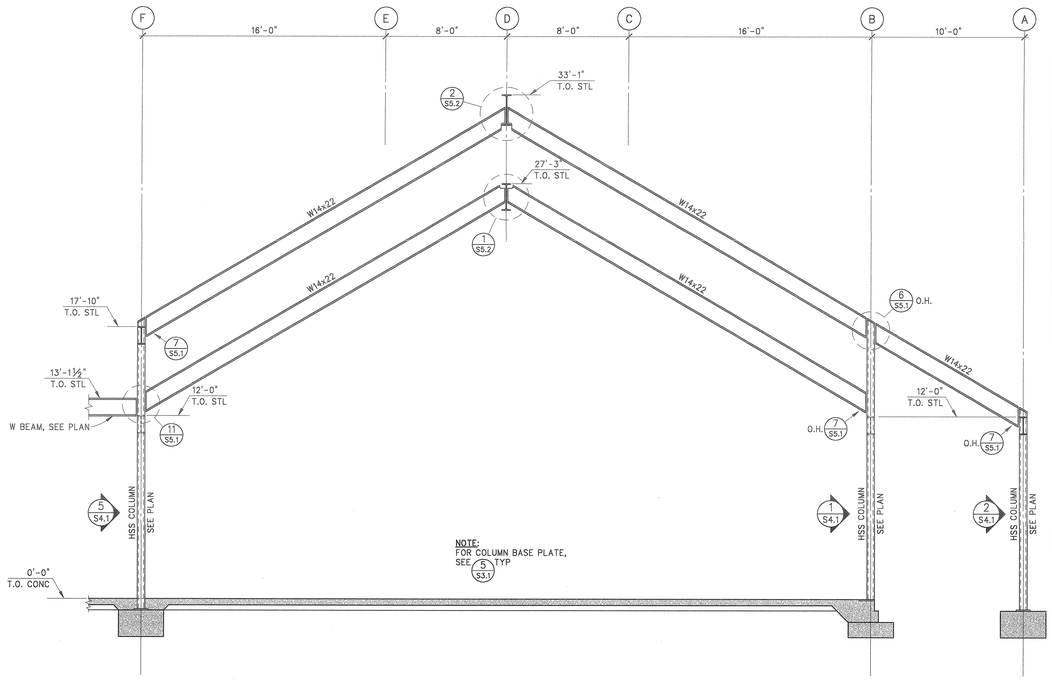

ELEVATION - LINE 16

SCALE: 1/4" = 1'-0" | 3 | KPFF | K0000 | S4.3

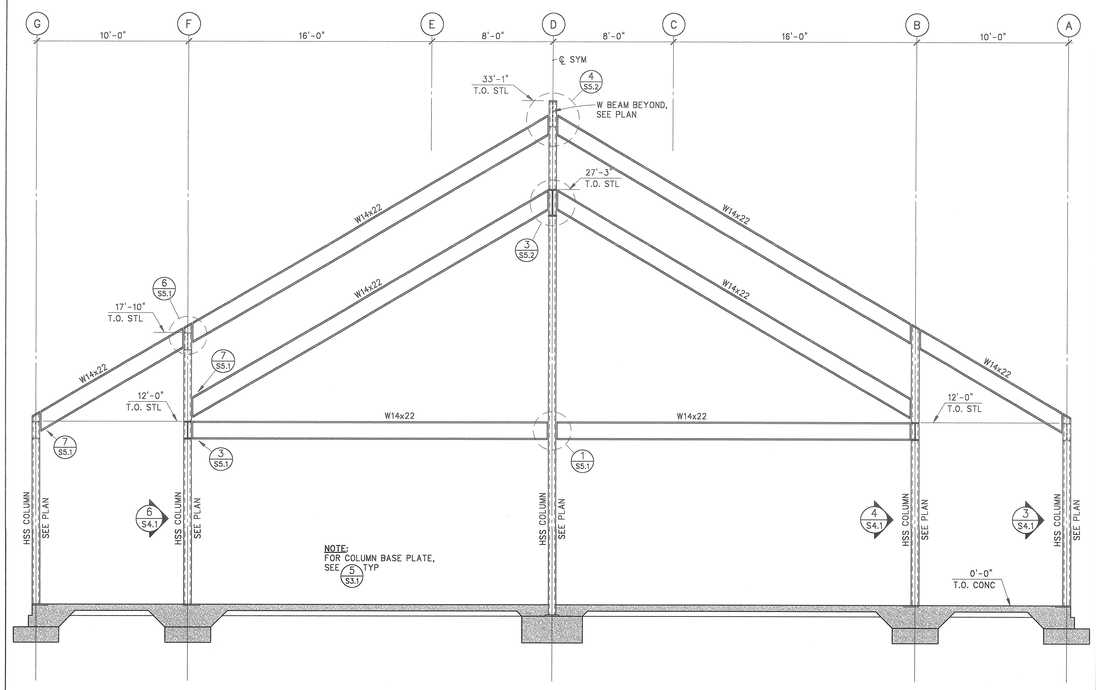

ELEVATION - LINE 3

SCALE: 1/4" = 1'-0" | 4 | KPFF | K0000 | S4.3

REGISTERED PROFESSIONAL ENGINEER
TIM L. HEIMAN
No. 2436
Exp. 3/31/07
STRUCTURAL
STATE OF CALIFORNIA

18 APRIL 2005
DATE SIGNED

kpff
Consulting Engineers
1160 Battery Street, Suite 300
San Francisco, California 94111
T: 415.989.1004 F: 415.989.1552
www.kpff.com ftp.kpff.com

MOUNTAIN VIEW SENIOR CENTER

266 ESCUELA AVE
MOUNTAIN VIEW, CA

DATE: APRIL 18, 2005

REVISIONS:

CONSTRUCTION SET

SHEET TITLE:

STEEL FRAME ELEVATIONS

DRAWN BY: FC
CHECKED BY: TLH
JOB NO: K103044

SHEET S4.3

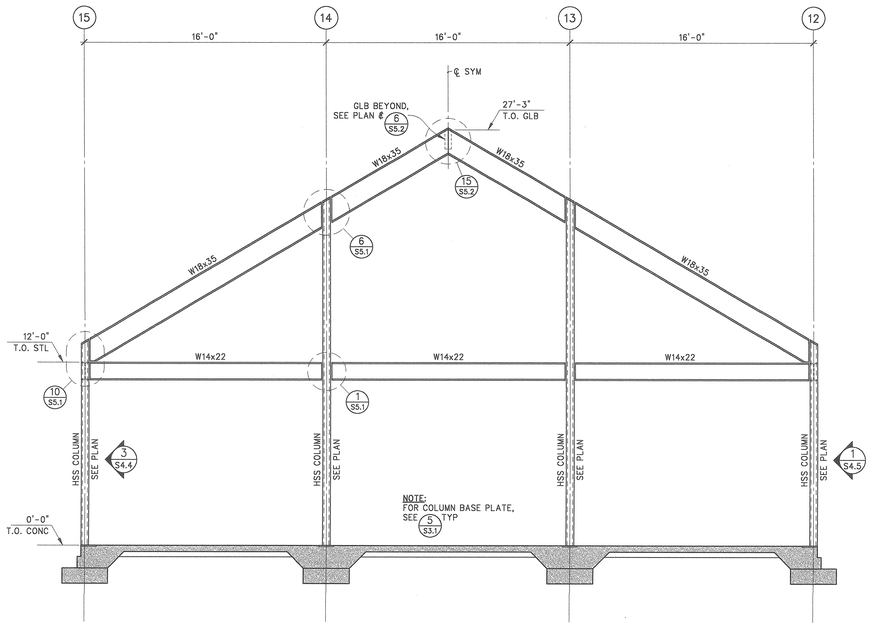

ELEVATION - LINE M

SCALE: 1/4" = 1'-0" | KPFF | K0000 | 1 | S4.4

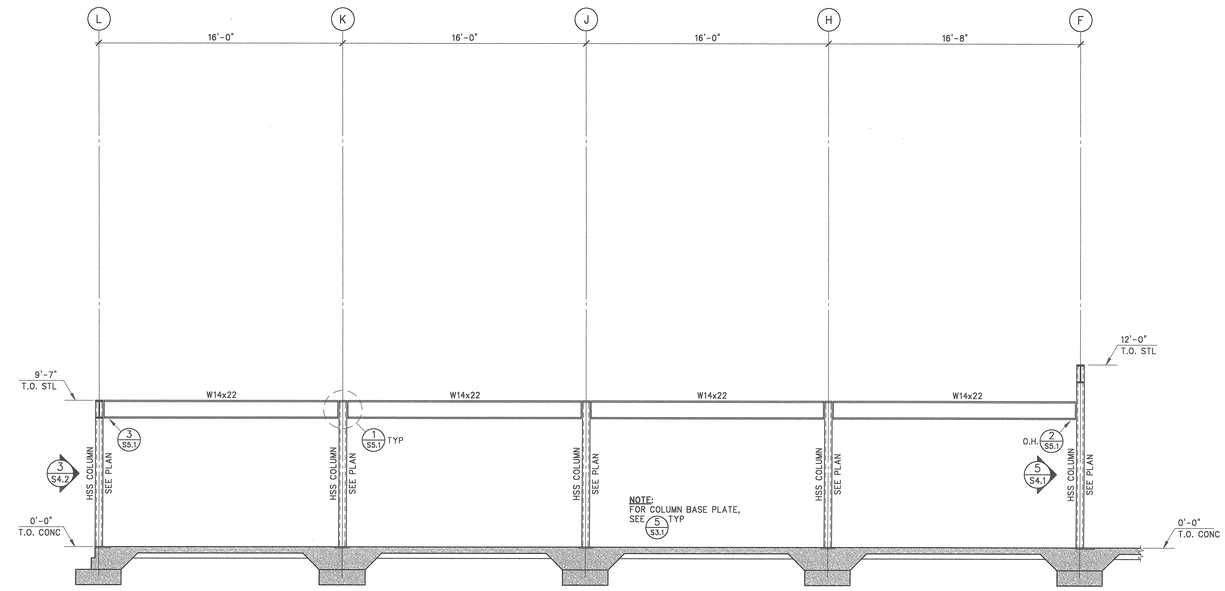

ELEVATION - LINE 18

SCALE: 1/4" = 1'-0" | KPFF | K0000 | 2 | S4.4

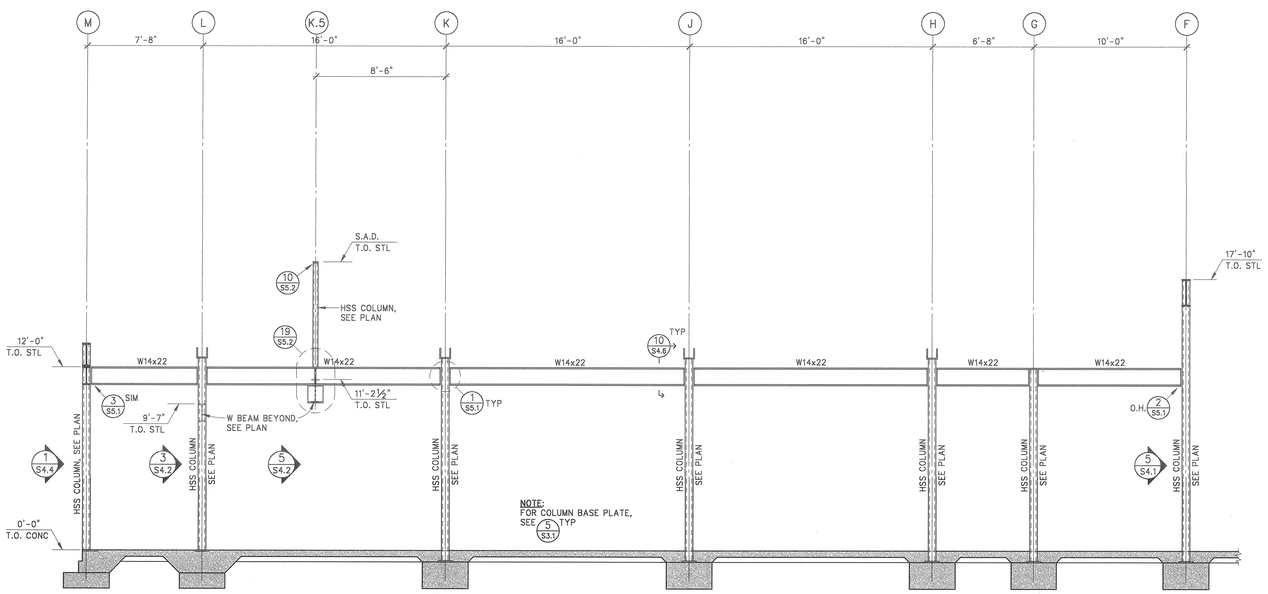

ELEVATION - LINE 15

SCALE: 1/4" = 1'-0" | KPFF | K0000 | 3 | S4.4

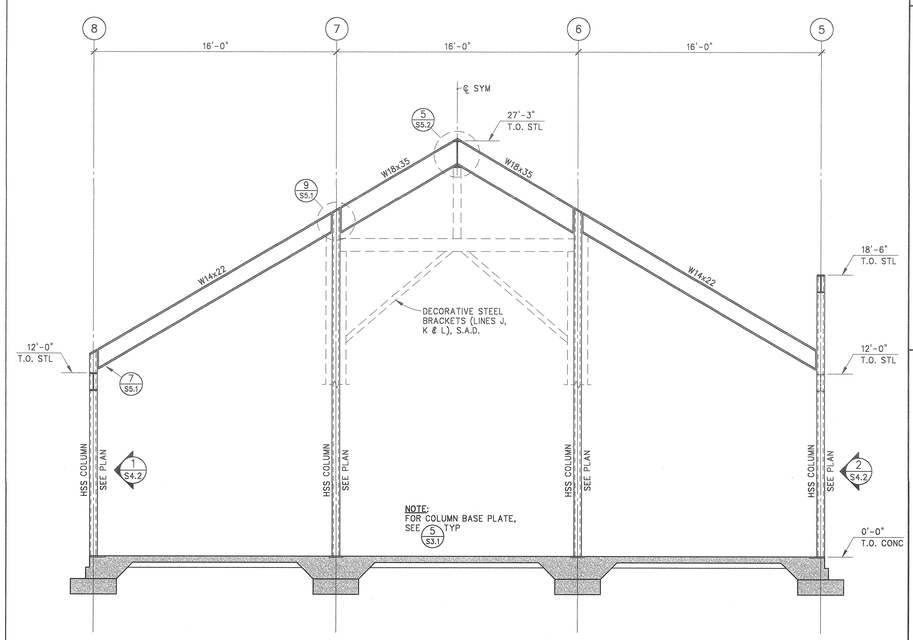

ELEVATION - LINE J (LINE K SIM)

SCALE: 1/4" = 1'-0" | KPFF | K0000 | 4 | S4.4

REGISTERED PROFESSIONAL ENGINEER
TIM L. HEIMAN
No. 2436
Exp. 3/31/07
STRUCTURAL
STATE OF CALIFORNIA

18 APRIL 2005
DATE SIGNED

kpff
Consulting Engineers
1160 Battery Street, Suite 300
San Francisco, California 94111
T: 415.989.1004 F: 415.989.1552
www.kpff.com ftp.kpff.com

MOUNTAIN VIEW SENIOR CENTER

266 ESCUELA AVE
MOUNTAIN VIEW, CA

DATE: APRIL 18, 2005

REVISIONS:

CONSTRUCTION SET

SHEET TITLE:

STEEL FRAME ELEVATIONS

DRAWN BY: FC
CHECKED BY: TLH
JOB NO: K103044

SHEET S4.4

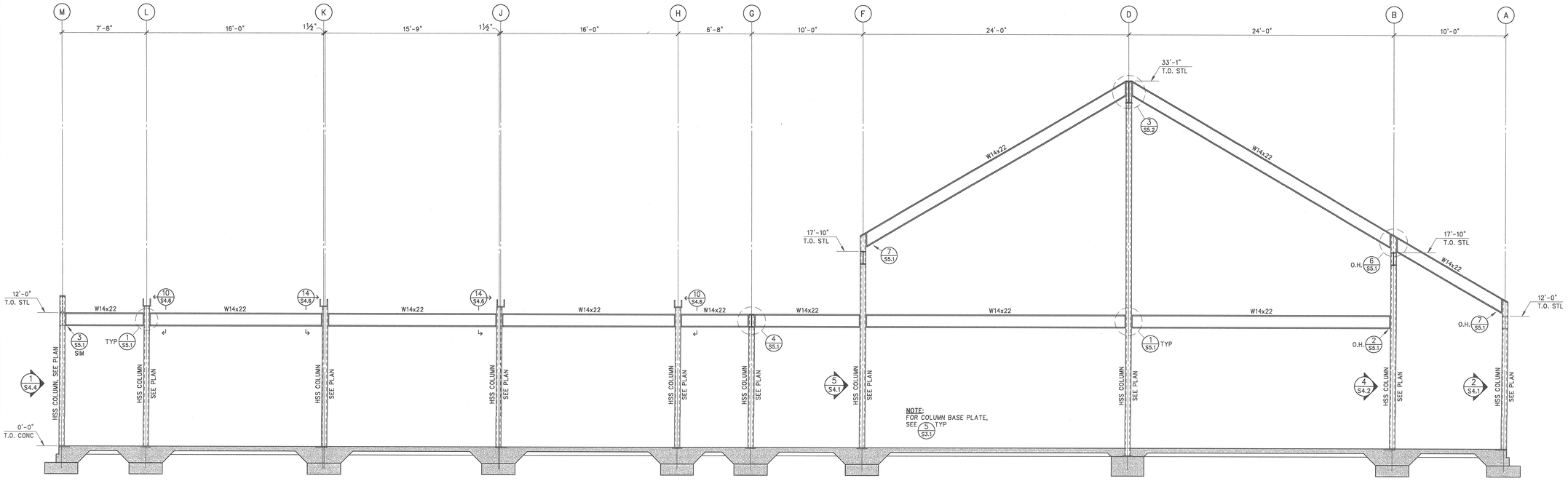

ELEVATION - LINE 12

SCALE: 1/4" = 1'-0"

1 / S4.5

XPFF K0000

REGISTERED PROFESSIONAL ENGINEER
TIM L. HEIMAN
No. 2436
Exp. 3/31/07
STRUCTURAL
STATE OF CALIFORNIA

18 APRIL 2005
DATE SIGNED

kpff
Consulting Engineers
1160 Battery Street, Suite 300
San Francisco, California 94111
T: 415.989.1004 F: 415.989.1552
www.kpff.com ftp.kpff.com

MOUNTAIN VIEW SENIOR CENTER

266 ESCUELA AVE
MOUNTAIN VIEW, CA

DATE: APRIL 18, 2005

REVISIONS:

CONSTRUCTION SET

SHEET TITLE:

STEEL FRAME ELEVATIONS

DRAWN BY: FC
CHECKED BY: TLH
JOB NO: K103044

SHEET
S4.5

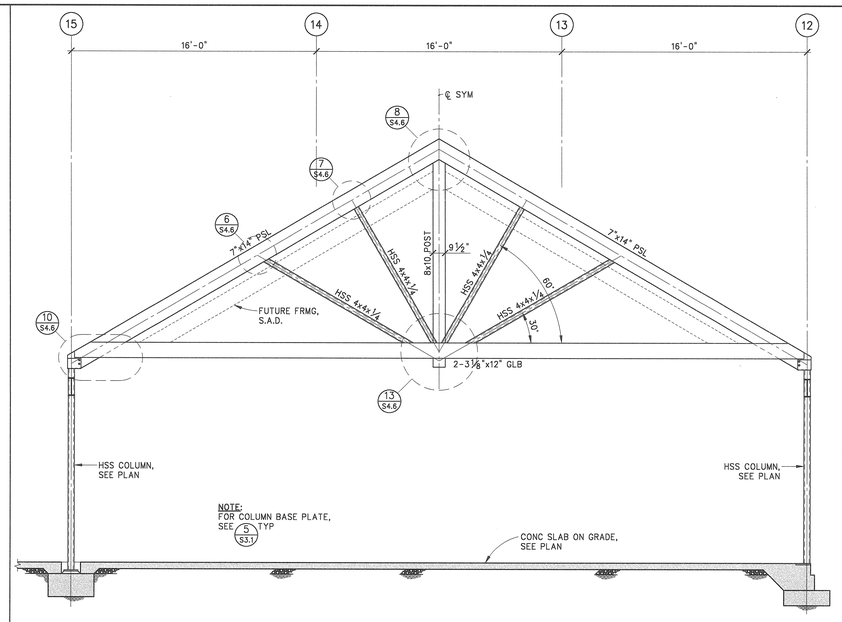

SOCIAL HALL TRUSS (LINES H & L)

ELEVATION

SCALE: 1/4" = 1'-0" | KPFF | K0000 | **1** S4.6

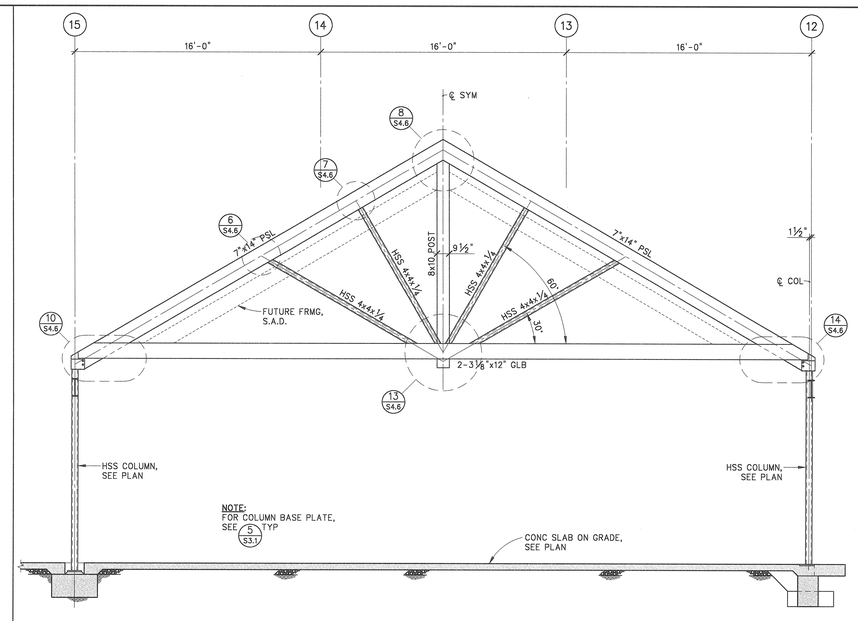

SOCIAL HALL TRUSS (LINES J & K)

ELEVATION

SCALE: 1/4" = 1'-0" | KPFF | K0000 | **2** S4.6

NOT USED

SCALE: NONE | **3** S4.6

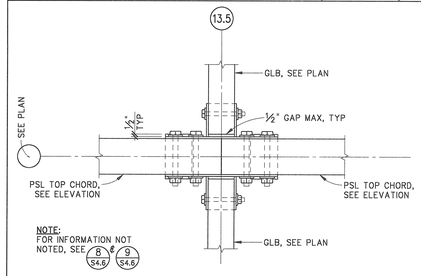

GLB TO TRUSS CONN

PLAN DETAIL

SCALE: 1" = 1'-0" | KPFF | K0000 | **4** S4.6

NOT USED

SCALE: NONE | **5** S4.6

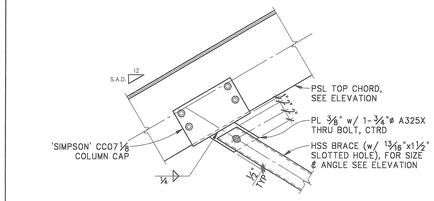

BRACE CONN

DETAIL

SCALE: 1" = 1'-0" | KPFF | K0000 | **6** S4.6

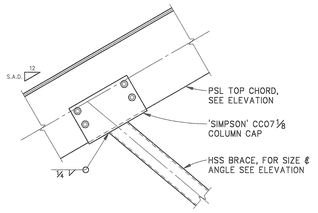

BRACE CONN

DETAIL

SCALE: 1" = 1'-0" | KPFF | K0000 | **7** S4.6

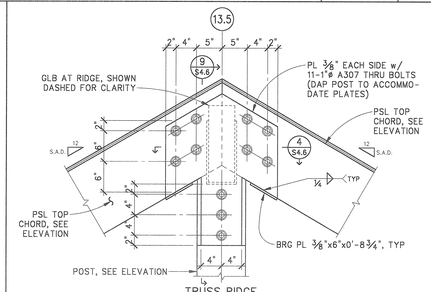

TRUSS RIDGE

DETAIL

SCALE: 1" = 1'-0" | KPFF | K0000 | **8** S4.6

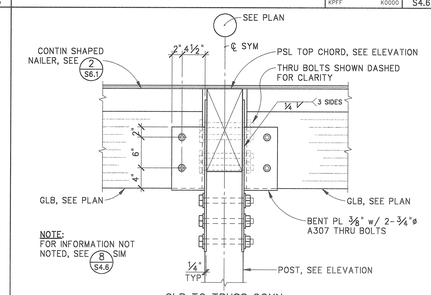

GLB TO TRUSS CONN

DETAIL

SCALE: 1" = 1'-0" | KPFF | K0000 | **9** S4.6

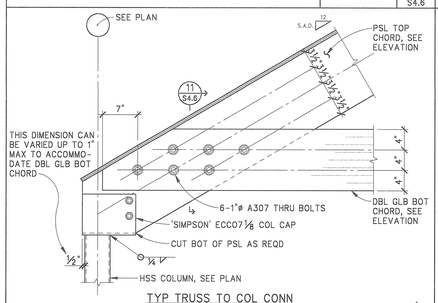

TYP TRUSS TO COL CONN

DETAIL

SCALE: 1" = 1'-0" | KPFF | K0000 | **10** S4.6

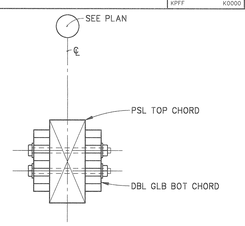

NOTE:
FOR INFORMATION NOT NOTED, SEE 10 S4.6

SECTION

SCALE: 1" = 1'-0" | KPFF | K0000 | **11** S4.6

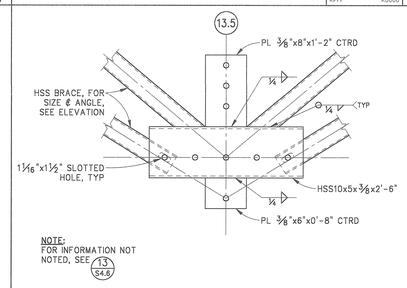

NOTE:
FOR INFORMATION NOT NOTED, SEE 13 S4.6

POST/BRACE CONN

DETAIL

SCALE: NONE | KPFF | K0000 | **12** S4.6

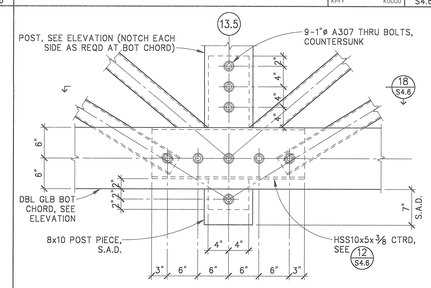

POST/BRACE TO BOT CHORD CONN

DETAIL

SCALE: 1" = 1'-0" | KPFF | K0000 | **13** S4.6

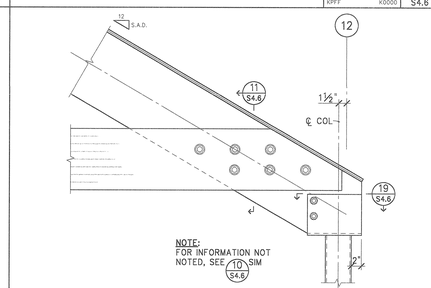

TRUSS TO COL CONN

DETAIL

SCALE: 1" = 1'-0" | KPFF | K0000 | **14** S4.6

NOT USED

SCALE: NONE | **15** S4.6

NOT USED

SCALE: NONE | **16** S4.6

NOT USED

SCALE: NONE | **17** S4.6

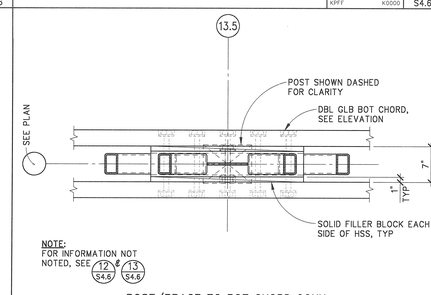

POST/BRACE TO BOT CHORD CONN

PLAN DETAIL

SCALE: 1" = 1'-0" | KPFF | K0000 | **18** S4.6

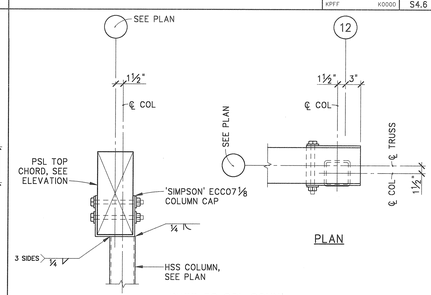

TRUSS TO COL CONN

DETAIL

SCALE: 1" = 1'-0" | KPFF | K0000 | **19** S4.6

REGISTERED PROFESSIONAL ENGINEER
TIM L. HEIMAN
No. 2436
Exp. 3/31/07
STRUCTURAL
STATE OF CALIFORNIA

18 APRIL 2005
DATE SIGNED

kpff
Consulting Engineers
1160 Battery Street, Suite 300
San Francisco, California 94111
T: 415.989.1004 F: 415.989.1552
www.kpff.com ftp.kpff.com

MOUNTAIN VIEW SENIOR CENTER

266 ESCUELA AVE
MOUNTAIN VIEW, CA

DATE: APRIL 18, 2005

REVISIONS:

CONSTRUCTION SET

SHEET TITLE:

WOOD TRUSS ELEVATION & DETAILS

DRAWN BY: FC
CHECKED BY: TLH
JOB NO: K103044

SHEET S4.6