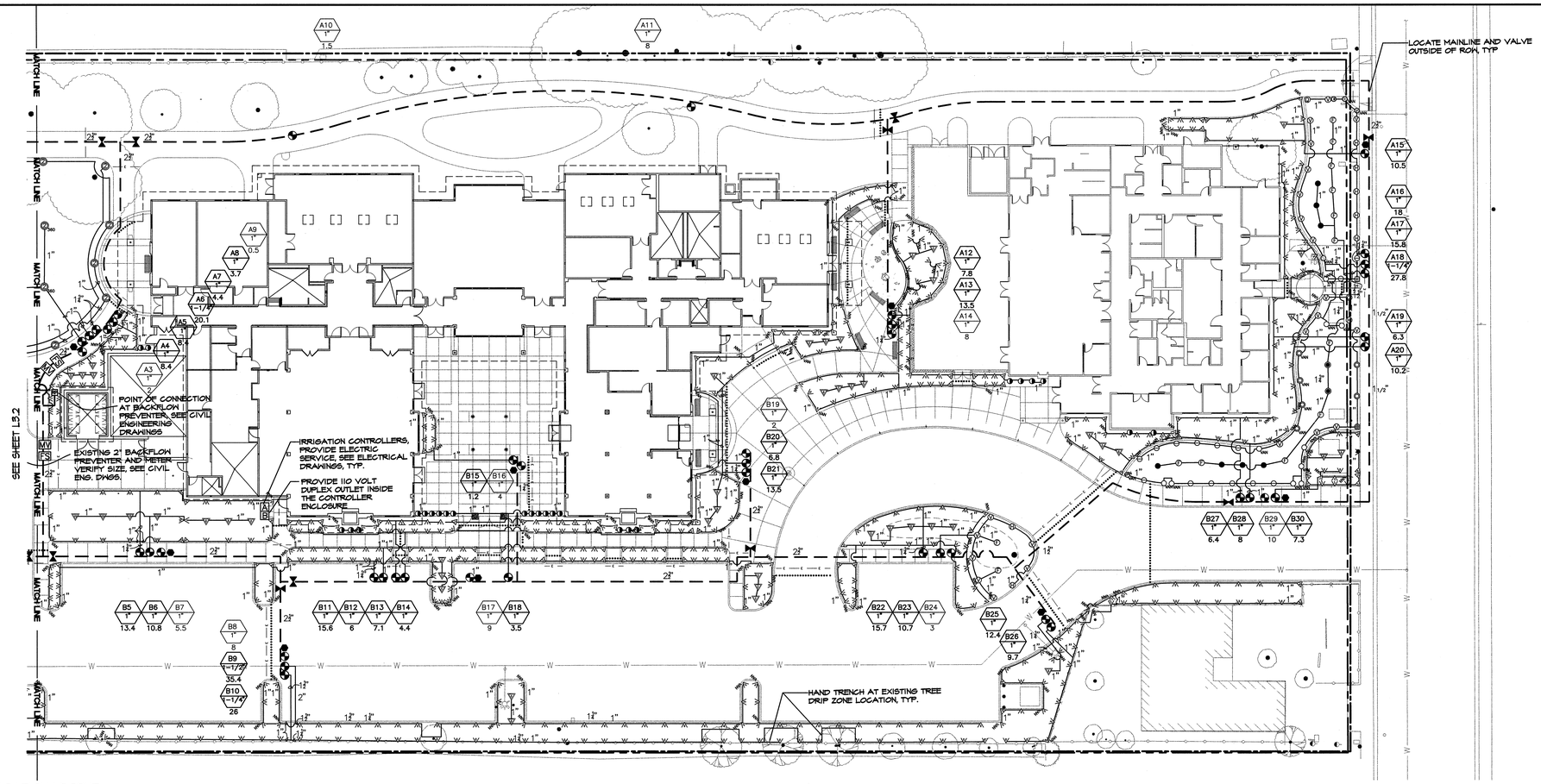

IRRIGATION LEGEND

DETAIL	SYMBOL	MODEL NUMBER	MANUFACTURER	DESCRIPTION	RAD	GPM	PSI
6 / L5.4		1-20-ADJ-2.0 LA	HUNTER	ROTOR, 4" POP-UP, W/ ADJUSTABLE LOW ANGLE NOZ.	21'-28'	2.1	60
	$_{ARC}$	1-20-360-2.0 LA	HUNTER	ROTOR, 4" POP-UP, W/ FULL CIRCLE LOW ANGLE NOZ.	21'-28'	2.1	60
7 / L5.4		570Z 6P-PRX-COM-5-F	TORO	LAWN SPRAY, 6" POP-UP, PRESSURE REG. AND X-FLOW W/ 5' SERIES MPR NOZ.	5'	0.58	50
		570Z 6P-PRX-COM-5-H	TORO	LAWN SPRAY, 6" POP-UP, PRESSURE REG. AND X-FLOW W/ 5' SERIES MPR NOZ.	5'	0.19	50
		570Z 6P-PRX-COM-5-Q	TORO	LAWN SPRAY, 6" POP-UP, PRESSURE REG. AND X-FLOW W/ 5' SERIES MPR NOZ.	5'	0.09	50
	$_{VAN}$	570Z 6P-PRX-COM-5-VAN	TORO	LAWN SPRAY, 6" POP-UP, PRESSURE REG. AND X-FLOW W/ 5' VARIABLE SERIES MPR NOZ.	5	VARIES	50
		570Z 6P-PRX-COM-8-F	TORO	LAWN SPRAY, 6" POP-UP, PRESSURE REG. AND X-FLOW W/ 8' SERIES MPR NOZ.	8'	1.0	50
		570Z 6P-PRX-COM-8-H	TORO	LAWN SPRAY, 6" POP-UP, PRESSURE REG. AND X-FLOW W/ 8' SERIES MPR NOZ.	8'	0.50	50
		570Z 6P-PRX-COM-8-Q	TORO	LAWN SPRAY, 6" POP-UP, PRESSURE REG. AND X-FLOW W/ 8' SERIES MPR NOZ.	8'	0.24	50
	$_{VAN}$	570Z 6P-PRX-COM-8-VAN	TORO	LAWN SPRAY, 6" POP-UP, PRESSURE REG. AND X-FLOW W/ 8' VARIABLE SERIES MPR NOZ.	8'	VARIES	50
		570Z 6P-PRX-COM-10-F	TORO	LAWN SPRAY, 6" POP-UP, PRESSURE REG. AND X-FLOW W/ 10' SERIES MPR NOZ.	10'	1.49	50
		570Z 6P-PRX-COM-10-H	TORO	LAWN SPRAY, 6" POP-UP, PRESSURE REG. AND X-FLOW W/ 10' SERIES MPR NOZ.	10'	0.71	50
		570Z 6P-PRX-COM-10-Q	TORO	LAWN SPRAY, 6" POP-UP, PRESSURE REG. AND X-FLOW W/ 10' SERIES MPR NOZ.	10'	0.40	50
		570Z 6P-PRX-COM-10-VAN	TORO	LAWN SPRAY, 6" POP-UP, PRESSURE REG. AND X-FLOW W/ 10' VARIABLE SERIES MPR NOZ.	10'	VARIES	50
		570Z 6P-PRX-COM-12-F	TORO	LAWN SPRAY, 6" POP-UP, PRESSURE REG. AND X-FLOW W/ 12' SERIES MPR NOZ.	12'	2.19	50
		570Z 6P-PRX-COM-12-H	TORO	LAWN SPRAY, 6" POP-UP, PRESSURE REG. AND X-FLOW W/ 12' SERIES MPR NOZ.	12'	1.09	50
		570Z 6P-PRX-COM-12-Q	TORO	LAWN SPRAY, 6" POP-UP, PRESSURE REG. AND X-FLOW W/ 12' SERIES MPR NOZ.	12'	0.50	50
	$_{VAN}$	570Z 6P-PRX-COM-12-VAN	TORO	LAWN SPRAY, 6" POP-UP, PRESSURE REG. AND X-FLOW W/ 12' VARIABLE SERIES MPR NOZ.	12'	VARIES	50
		570Z 6P-PRX-COM-15-F	TORO	LAWN SPRAY, 6" POP-UP, PRESSURE REG. AND X-FLOW W/ 15' SERIES MPR NOZ.	15'	3.60	50
		570Z 6P-PRX-COM-15-H	TORO	LAWN SPRAY, 6" POP-UP, PRESSURE REG. AND X-FLOW W/ 15' SERIES MPR NOZ.	15'	1.65	50
		570Z 6P-PRX-COM-15-Q	TORO	LAWN SPRAY, 6" POP-UP, PRESSURE REG. AND X-FLOW W/ 15' SERIES MPR NOZ.	15'	0.85	50
	$_{VAN}$	570Z 6P-PRX-COM-15-VAN	TORO	LAWN SPRAY, 6" POP-UP, PRESSURE REG. AND X-FLOW W/ 15' VARIABLE SERIES MPR NOZ.	15'	VARIES	50
8 / L5.4		570Z 6P-PRX-COM-5-F	TORO	SHRUB SPRAY, 6" POP-UP, PRESSURE REG. AND X-FLOW W/ 5' SERIES MPR NOZ.	5'	0.58	50
		570Z 6P-PRX-COM-5-H	TORO	SHRUB SPRAY, 6" POP-UP, PRESSURE REG. AND X-FLOW W/ 5' SERIES MPR NOZ.	5'	0.19	50
		570Z 6P-PRX-COM-5-Q	TORO	SHRUB SPRAY, 6" POP-UP, PRESSURE REG. AND X-FLOW W/ 5' SERIES MPR NOZ.	5'	0.09	50
	$_{VAN}$	570Z 6P-PRX-COM-5-VAN	TORO	SHRUB SPRAY, 6" POP-UP, PRESSURE REG. AND X-FLOW W/ 5' VARIABLE SERIES MPR NOZ.	5'	VARIES	50
		570Z 6P-PRX-COM-8-F	TORO	SHRUB SPRAY, 6" POP-UP, PRESSURE REG. AND X-FLOW W/ 8' SERIES MPR NOZ.	8'	1.0	50
		570Z 6P-PRX-COM-8-H	TORO	SHRUB SPRAY, 6" POP-UP, PRESSURE REG. AND X-FLOW W/ 8' SERIES MPR NOZ.	8'	0.50	50
		570Z 6P-PRX-COM-8-Q	TORO	SHRUB SPRAY, 6" POP-UP, PRESSURE REG. AND X-FLOW W/ 8' SERIES MPR NOZ.	8'	0.24	50
	$_{VAN}$	570Z 6P-PRX-COM-8-VAN	TORO	SHRUB SPRAY, 6" POP-UP, PRESSURE REG. AND X-FLOW W/ 8' VARIABLE SERIES MPR NOZ.	8'	VARIES	50
		570Z 6P-PRX-COM-10-F	TORO	SHRUB SPRAY, 6" POP-UP, PRESSURE REG. AND X-FLOW W/ 10' SERIES MPR NOZ.	10'	1.49	50
		570Z 6P-PRX-COM-10-H	TORO	SHRUB SPRAY, 6" POP-UP, PRESSURE REG. AND X-FLOW W/ 10' SERIES MPR NOZ.	10'	0.71	50
		570Z 6P-PRX-COM-10-Q	TORO	SHRUB SPRAY, 6" POP-UP, PRESSURE REG. AND X-FLOW W/ 10' SERIES MPR NOZ.	10'	0.40	50
	$_{VAN}$	570Z 6P-PRX-COM-10-VAN	TORO	SHRUB SPRAY, 6" POP-UP, PRESSURE REG. AND X-FLOW W/ 10' VARIABLE SERIES MPR NOZ.	10'	VARIES	50
		570Z 6P-PRX-COM-12-F	TORO	SHRUB SPRAY, 6" POP-UP, PRESSURE REG. AND X-FLOW W/ 12' SERIES MPR NOZ.	12'	2.19	50
		570Z 6P-PRX-COM-12-H	TORO	SHRUB SPRAY, 6" POP-UP, PRESSURE REG. AND X-FLOW W/ 12' SERIES MPR NOZ.	12'	1.09	50
		570Z 6P-PRX-COM-12-Q	TORO	SHRUB SPRAY, 6" POP-UP, PRESSURE REG. AND X-FLOW W/ 12' SERIES MPR NOZ.	12'	0.50	50
	$_{VAN}$	570Z 6P-PRX-COM-12-VAN	TORO	SHRUB SPRAY, 6" POP-UP, PRESSURE REG. AND X-FLOW W/ 12' VARIABLE SERIES MPR NOZ.	12'	VARIES	50
		570Z 6P-PRX-COM-15-F	TORO	SHRUB SPRAY, 6" POP-UP, PRESSURE REG. AND X-FLOW W/ 15' SERIES MPR NOZ.	15'	3.60	50
		570Z 6P-PRX-COM-15-H	TORO	SHRUB SPRAY, 6" POP-UP, PRESSURE REG. AND X-FLOW W/ 15' SERIES MPR NOZ.	15'	1.65	50
		570Z 6P-PRX-COM-15-Q	TORO	SHRUB SPRAY, 6" POP-UP, PRESSURE REG. AND X-FLOW W/ 15' SERIES MPR NOZ.	15'	0.85	50
	$_{VAN}$	570Z 6P-PRX-COM-15-VAN	TORO	SHRUB SPRAY, 6" POP-UP, PRESSURE REG. AND X-FLOW W/ 15' VARIABLE SERIES MPR NOZ.	15'	VARIES	50
9 / L5.4		570Z-4P-PRX-COM FB-200-ADJ-PC	TORO	ADJUSTABLE FLOW FULL-CIRCLE FLOOD BUBBLER ON 4" POP-UP WITH PRESSURE REG. AND X-FLOW. SET FLOW AT 0.25 GPM TYP.	--	VARIES	50
15 / L5.4, 16 / L5.4		FB-200-ADJ-PC	TORO	ADJUSTABLE FLOW FULL-CIRCLE FLOOD BUBBLER. SET FLOW AT 0.25 GPM TYP.	--	VARIES	50

DETAIL	SYMBOL	MODEL NUMBER	MANUFACTURER	DESCRIPTION
5 / L5.4, 4 / L5.4		DW-S SERIES RCV	GRISWOLD	REMOTE CONTROL VALVE ASSEMBLY AND BOX. SIZE PER PLAN. INSTALL PER DETAIL.
4 / L5.4, 14 / L5.4		PER SPEC (SAME SIZE AS LINE)		ISOLATION VALVE
5 / L5.4		33 DNP	RAINBIRD	3/4 INCH QUICK COUPLING VALVE WITH PURPLE COVER. PROVIDE OWNER WITH TWO #2044 VALVE KEYS WITH RAINBIRD 5H-0 SWIVEL HOSE ELL ATTACHED.
2 / L5.4		PVC CLASS 200 SCH 40 UNDER PAVING		NON-PRESSURE LATERAL IRRIGATION PIPE WITH SOLVENT WELD SCHEDULE 40 FITTINGS. 1" MIN. PIPE SIZE.
		PVC SCHEDULE 40 & CLASS 315		MAIN PRESSURE IRRIGATION PIPE. SEE SPECS SIZE — MATERIAL 1"-1½" — SCH 40 W/SOLVENT WELD SCH 40 FITTINGS 2"-3" — CLASS 315 W SOLVENT WELD SCH 40 FITTINGS
		PVC CLASS 315		SLEEVE. SIZE AS REQUIRED
		PVC SCHEDULE 40 ELECTRICAL CONDUIT		ELECTRICAL CONDUIT. SIZE AS REQUIRED. INSTALL PARALLEL TO MAIN LINE UNDER ALL PAVING.
	RP	SEE CIVIL'S DWGS		RELOCATED OR NEW REDUCED PRESSURE BACKFLOW PREVENTOR WITH COVER SEE CIVIL ENGINEERING DRAWINGS.
1 / L5.4	A	RAINMASTER / EAGLE CAS-RM15-36/ICARD-F/FSMV-200P/RM-15VC-2Y		UNITED GREEN TECH CONTROLLER ASSEMBLIES, PROVIDE PROMAX REMOTE CONTROL TRANSMITTER & BUILT-IN PROMAX REMOTE RECEIVER. PROVIDE UST CERTIFICATION & 5-YEAR WARRANTY
	B	RAINMASTER / EAGLE CAS-RM15-36/ICARD-F/FSMV-200P/RM-15VC-2Y		
10 / L5.4	FS	FLOW SENSOR SEE CONTROLLER		
	MV	MASTER VALVE SEE CONTROLLER		

1 — STATION
1" — VALVE SIZE
1.0 — GALLONS PER MINUTE

SPRAY AND GENERAL IRRIGATION NOTES:

1) INSTALL MAIN LINES, LATERAL LINES AND EQUIPMENT IN PLANTING AREAS AND NOT UNDER PAVEMENT EXCEPT WHERE NECESSARY BETWEEN PLANTERS SEPARATED BY PAVEMENT.

2) INSTALL ALL HEADS ADJACENT TO BUILDINGS AT LEAST 18" AWAY FROM THE BUILDING FACE.

3) THE CONTRACTOR SHALL VERIFY THAT THERE IS NO OVERSPRAY ONTO THE BUILDINGS AND PAVING. ADJUST OR RENOZZLE AS REQUIRED.

4) INSTALL SLEEVES FOR ALL LATERALS UNDER CONCRETE. NO SLEEVES ARE REQUIRED FOR LATERAL LINES UNDER ASPHALTIC CONCRETE, UNLESS OTHER WISE SHOWN ON DRAWING.

5) CAP ALL ABANDONED IRRIGATION SYSTEMS AS REQUIRED.

LATERAL PIPE SIZING CHART

1"----------4-12 GPM
1 1/4"----------13-22 GPM
1 1/2"----------23-30 GPM
2"----------31-50 GPM
2 1/2"----------51-70 GPM
3"----------71-110 GPM

MAIN LINE PIPE SIZE	SCHEDULE 40 (GPM)	CLASS 315 (GPM)	CLASS 200 (GPM)
1" *	-	-	-
1 1/2 "	0-30	-	-
2"	-	31-50	-
2 1/2"	-	51-70	-
3"	-	71-100	-
4"	-	-	101-200
6"	-	-	201-400

*1" MAIN LINE USED ONLY FOR GCV

SEE SHEET L3.3 FOR TREE BUBBLER IRRIGATION PLAN

TRUE NORTH
PLAN NORTH

0 20 40 60
1"= 20'

CARDUCCI & ASSOCIATES, INC.
LANDSCAPE ARCHITECTURE PLANNING
IRRIGATION DESIGN URBAN DESIGN
555 BEACH STREET, 4TH FLOOR
SAN FRANCISCO, CALIFORNIA 94133
(415) 674-0990 FAX (415) 674-0999

If the contractor encounters errors or discrepancies on the drawings, or site conditions which prevent or delay the completion of work as indicated, the contractor shall notify the owner and landscape architect by the time of bid of all such errors, discrepancies and omissions. The contractor shall indemnify and hold the landscape architect and the owner harmless if after contracting for the work he has monetary damage because of site conditions, errors, discrepancies or omissions at the time of bid

8/17/05
04/18/05
STATE OF CALIFORNIA

MOUNTAIN VIEW SENIOR CENTER

266 ESCUELA AVE
MOUNTAIN VIEW, CA

DATE: 18 APRIL 2005

CONSTRUCTION SET

SHEET TITLE:

IRRIGATION PLAN

DRAWN BY: PCD
CHECKED BY: VL
JOB NO: BSA 02-03

SHEET L3.1

09-23-04 L3-IRRIGATION PLAN

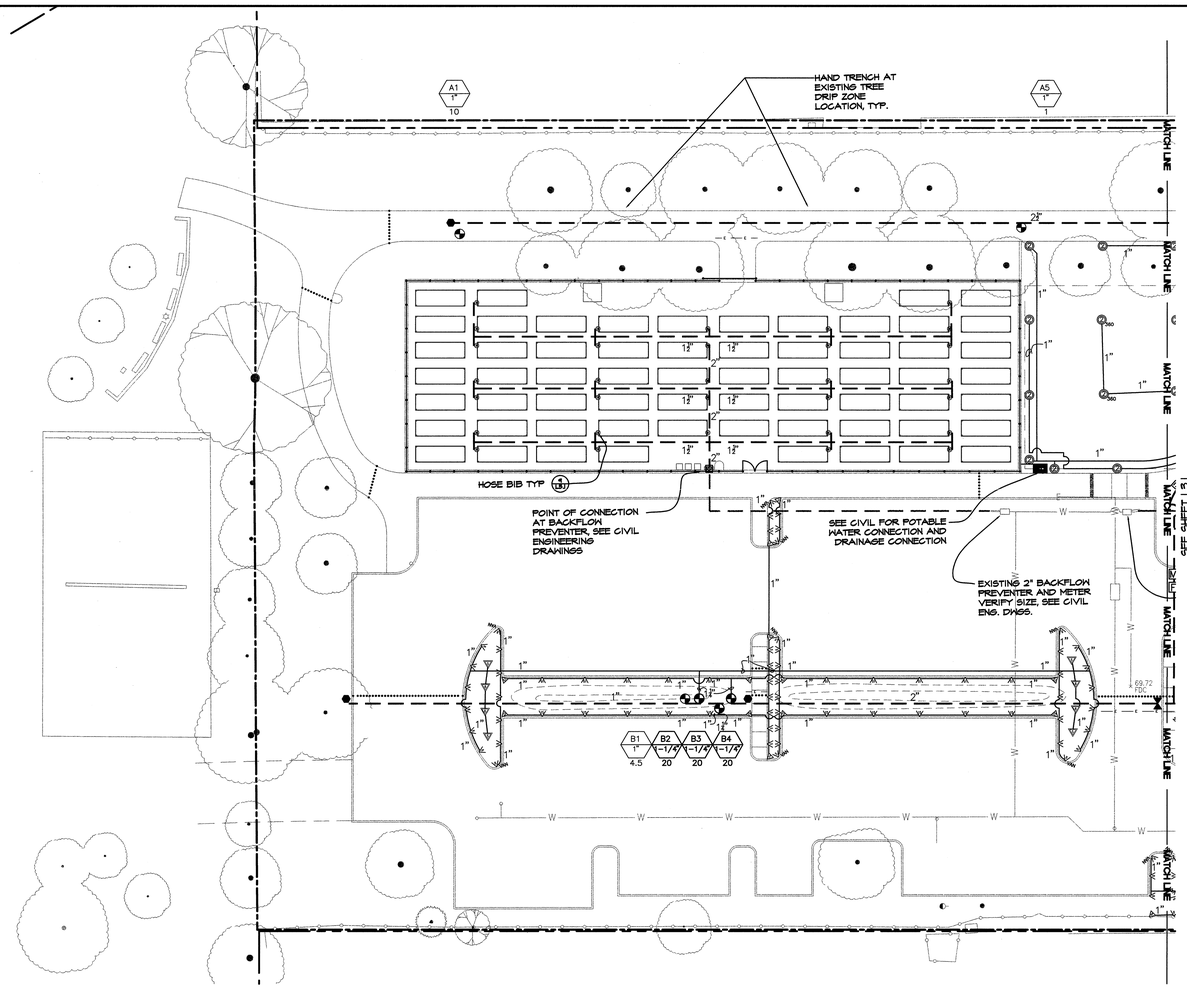

SEE SHEET L3.1 FOR LEGEND AND NOTES. SEE SHEET L3.3 FOR TREE BUBBLER IRRIGATION PLAN

TRUE NORTH

PLAN NORTH

0 20 40 60

1"= 20'

CARDUCCI & ASSOCIATES, INC.

LANDSCAPE ARCHITECTURE PLANNING
IRRIGATION DESIGN URBAN DESIGN

555 BEACH STREET, 4TH FLOOR
SAN FRANCISCO, CALIFORNIA 94133

(415) 674-0990 FAX (415) 674-0999

If the contractor encounters errors or discrepancies on the drawings, or site conditions which prevent or delay the completion of work as indicated, the contractor shall notify the owner and landscape architect by the time of bid of all such errors, discrepancies and omissions. The contractor shall indemnify and hold the landscape architect and the owner harmless if after contracting for the work he has monetary damage because of site conditions, errors, discrepancies or omissions at the time of bid

REGISTERED LANDSCAPE ARCHITECT
04/18/05
STATE OF CALIFORNIA

MOUNTAIN VIEW SENIOR CENTER

266 ESCUELA AVE
MOUNTAIN VIEW, CA

DATE: 18 APRIL 2005

CONSTRUCTION SET

SHEET TITLE:

IRRIGATION PLAN

DRAWN BY: PCD
CHECKED BY: VL
JOB NO: BSA 02-03

SHEET
L3.2

09-23-04 L3-IRRIGATION PLAN

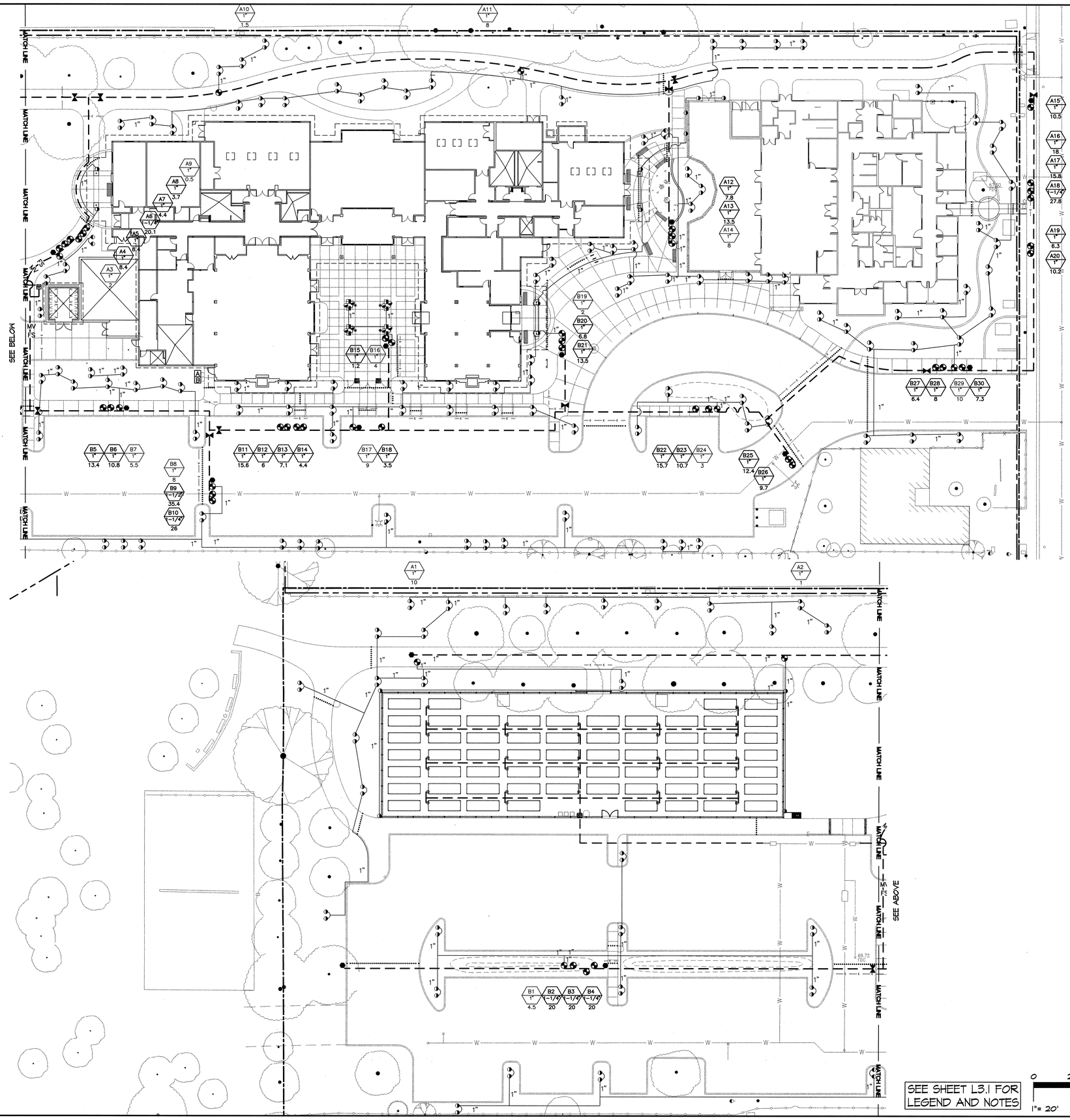

SEE SHEET L3.1 FOR LEGEND AND NOTES

09-23-04 L3-IRRIGATION PLAN

CARDUCCI & ASSOCIATES, INC.

LANDSCAPE ARCHITECTURE PLANNING
IRRIGATION DESIGN URBAN DESIGN

555 BEACH STREET, 4TH FLOOR
SAN FRANCISCO, CALIFORNIA 94133

(415) 674-0990 FAX (415) 674-0999

If the contractor encounters errors or discrepancies on the drawings, or site conditions which prevent or delay the completion of work as indicated, the contractor shall notify the owner and landscape architect by the time of bid of all such errors, discrepancies and omissions. The contractor shall indemnify the owner, landscape architect and the owner nominee if after contracting for the work he has monetary damage because of site conditions, errors, discrepancies or omissions at the time of bid

CARDUCCI LANDSCAPE ARCHITECT
8/31/05
04/18/05
STATE OF CALIFORNIA

MOUNTAIN VIEW SENIOR CENTER

266 ESCUELA AVE
MOUNTAIN VIEW, CA

DATE: 18 APRIL 2005

CONSTRUCTION SET

SHEET TITLE:

IRRIGATION TREE BUBBLER PLAN

DRAWN BY: PCD
CHECKED BY: VL
JOB NO: BSA 02-03

SHEET L3.3

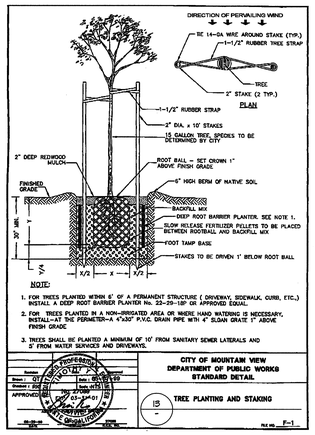

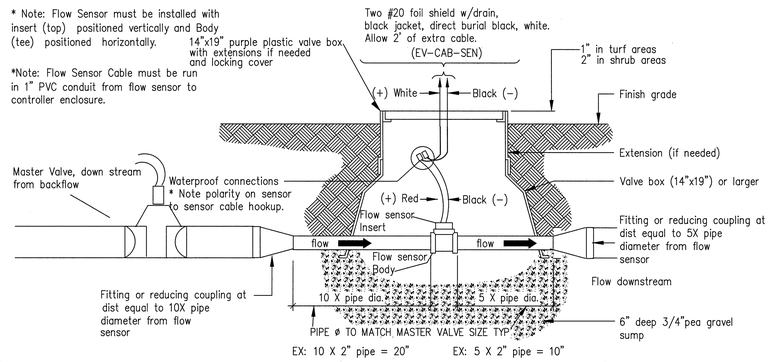

10 MASTER VALVE/ FLOW SENSOR
NTS

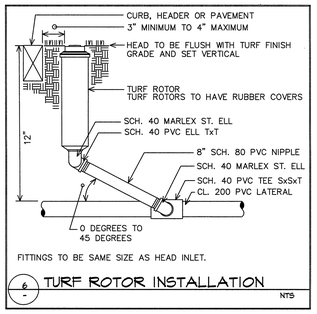

6 TURF ROTOR INSTALLATION
NTS

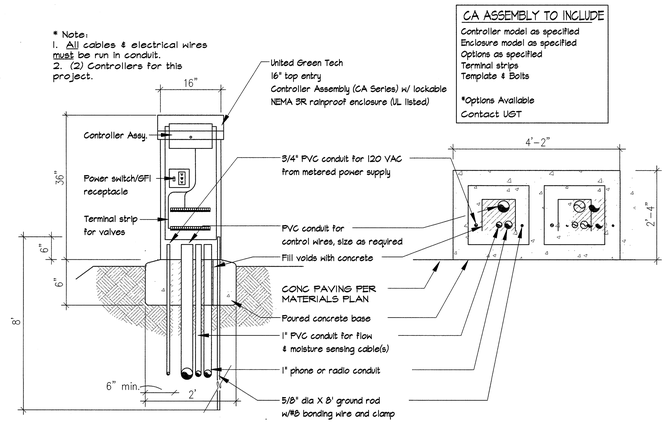

1 CONTROLLER ASSEMBLY (CA-6-SERIES)
SCALE: NTS

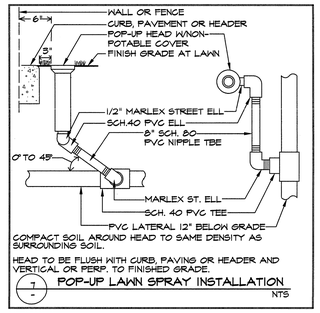

7 POP-UP LAWN SPRAY INSTALLATION
NTS

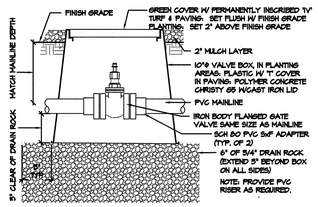

14 ISOLATION VALVE 2 1/2" AND LARGER
3"=1'-0

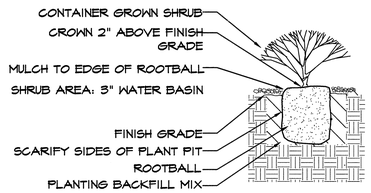

11 1 TO 5 GAL. SHRUB
NTS

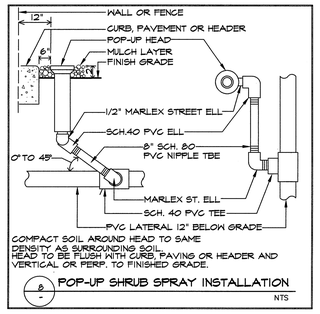

8 POP-UP SHRUB SPRAY INSTALLATION
NTS

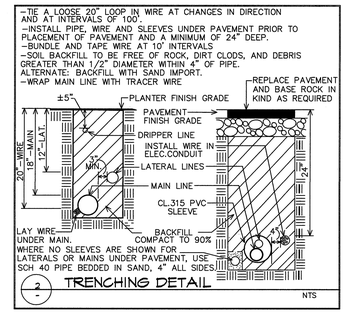

2 TRENCHING DETAIL
NTS

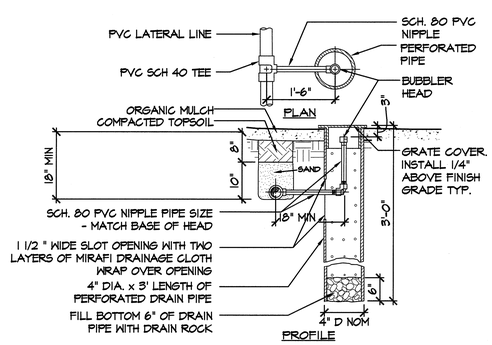

16 DEEP WATERING TUBE BUBBLER
3/4"=1'-0"

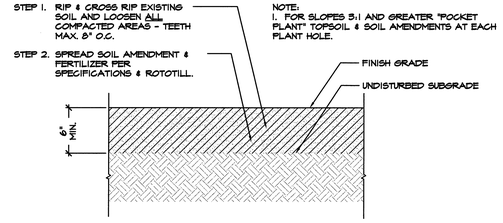

12 SOIL AMENDMENT SECTION FOR ON-SITE TOPSOIL
NTS

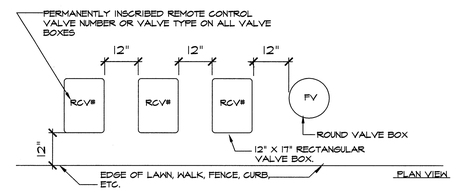

1. CENTER VALVE BOX OVER REMOTE CONTROL VALVE TO FACILITATE SERVICING VALVE.

2. SET BOXES 2" ABOVE FINISH GRADE OF MULCH COVER IN GROUND COVER/SHRUB AREA AND FLUSH WITH FINISH GRADE IN TURF AREA.

3. SET RCV AND VALVE BOX ASSEMBLY IN GROUND COVER/SHRUB AREA WHERE POSSIBLE. INSTALL IN LAWN ONLY IF GROUND COVER DOES NOT EXIST ADJACENT TO LAWN.

4. SET BOXES PARALLEL TO EACH OTHER AND PERPENDICULAR TO EDGE OF LAWN, WALK, FENCE, CURB, ETC.

5. AVOID HEAVILY COMPACTING SOIL AROUND VALVE BOXES TO PREVENT COLLAPSE AND DEFORMATION OF VALVE BOX SIDES.

6. INSTALL EXTENSION BY VALVE BOX MANUFACTURER AS REQUIRED TO COMPLETELY ENCLOSE ASSEMBLY FOR EASY ACCESS.

9 VALVE BOX INSTALLATION
NTS

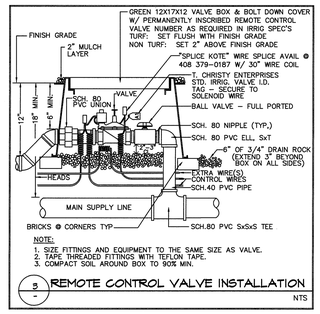

3 REMOTE CONTROL VALVE INSTALLATION
NTS

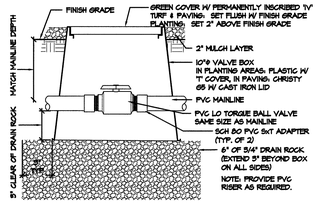

4 ISOLATION VALVE 2" AND SMALLER
5"=1'-0

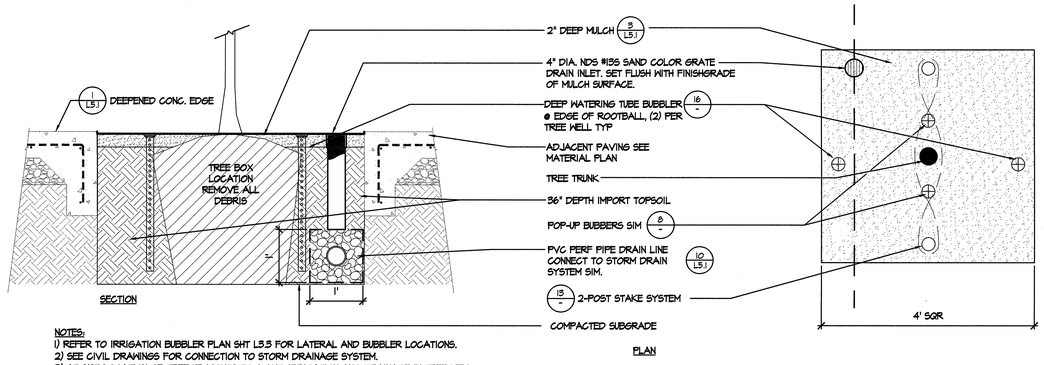

NOTES:
1) REFER TO IRRIGATION BUBBLER PLAN SHT L3.3 FOR LATERAL AND BUBBLER LOCATIONS.
2) SEE CIVIL DRAWINGS FOR CONNECTION TO STORM DRAINAGE SYSTEM.
3) ADJUST LOCATION OF TREE UP-LIGHTS TO AVOID IRRIGATION AND DRAINAGE IN TREE WELL. SEE ELEC DWGS.

15 TREE WELL
1"= 1'-0"

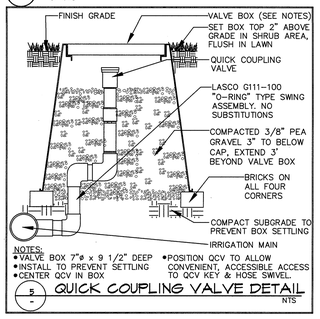

5 QUICK COUPLING VALVE DETAIL
NTS

CARDUCCI & ASSOCIATES, INC.
LANDSCAPE ARCHITECTURE PLANNING
IRRIGATION DESIGN URBAN DESIGN
555 BEACH STREET, 4TH FLOOR
SAN FRANCISCO, CALIFORNIA 94133
(415) 674-0990 FAX (415) 674-0999

If the contractor encounters errors or discrepancies on the drawings, or site conditions which prevent or delay the completion of work as indicated, the contractor shall notify the owner and landscape architect by the time of bid of all such errors, discrepancies and omissions. The contractor shall indemnify and hold the landscape architect and the owner harmless if after contracting for the work he has monetary damage because of site conditions, errors, discrepancies or omissions at the time of bid

8/31/05
04/18/05

MOUNTAIN VIEW SENIOR CENTER

266 ESCUELA AVE
MOUNTAIN VIEW, CA

DATE: 18 APRIL 2005

CONSTRUCTION SET

SHEET TITLE:

IRRIGATION & PLANTING DETAILS

DRAWN BY: PCD
CHECKED BY: VL
JOB NO: BSA 02-03

SHEET L3.4

09-23-04 L3.3 IRRIGATION DETAILS