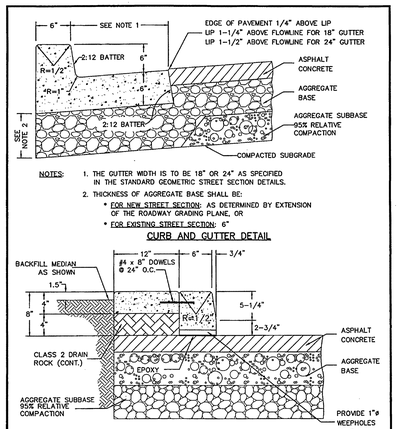

NOTES:

1. THE GUTTER WIDTH IS TO BE 18" OR 24" AS SPECIFIED IN THE STANDARD GEOMETRIC STREET SECTION DETAILS.
2. THICKNESS OF AGGREGATE BASE SHALL BE:
   - * FOR NEW STREET SECTION: AS DETERMINED BY EXTENSION OF THE ROADWAY GRADING PLANE, OR
   - * FOR EXISTING STREET SECTION: 6"

CURB AND GUTTER DETAIL

EXTRUDED MEDIAN CURB DETAIL

CITY OF MOUNTAIN VIEW
DEPARTMENT OF PUBLIC WORKS
STANDARD DETAIL

STANDARD CURB & GUTTER AND EXTRUDED MEDIAN CURB

Drawn: OT Date: 05/07/99
Checked: RK Scale: NTS
APPROVED: Exp. 03-31-01 No. 27089 REGISTERED PROFESSIONAL ENGINEER STATE OF CALIFORNIA
06-29-99 DATE 27089 R.C.E. NO.
FILE NO. A-6

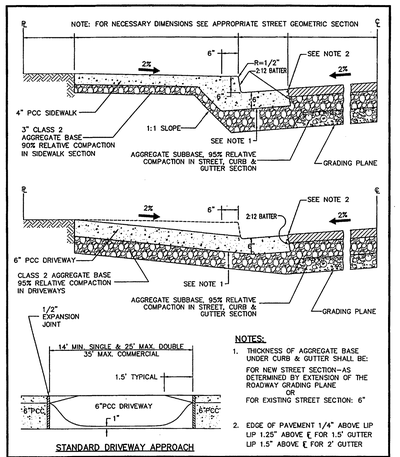

NOTES:

1. THICKNESS OF AGGREGATE BASE UNDER CURB & GUTTER SHALL BE:
   FOR NEW STREET SECTION–AS DETERMINED BY EXTENSION OF THE ROADWAY GRADING PLANE
   OR
   FOR EXISTING STREET SECTION: 6"
2. EDGE OF PAVEMENT 1/4" ABOVE LIP
   LIP 1.25" ABOVE ℄ FOR 1.5' GUTTER
   LIP 1.5" ABOVE ℄ FOR 2' GUTTER

STANDARD DRIVEWAY APPROACH

CITY OF MOUNTAIN VIEW
DEPARTMENT OF PUBLIC WORKS
STANDARD DETAIL

STANDARD CROSS-SECTIONS CURB, GUTTER, SIDEWALK AND DRIVEWAY APPROACH

Drawn: OT Date: 05/07/99
Checked: RK Scale: NTS
APPROVED: Exp. 03-31-01 No. 27089 REGISTERED PROFESSIONAL ENGINEER STATE OF CALIFORNIA
06-29-99 DATE 27089 R.C.E. NO.
FILE NO. A-7

SIGN:

STOP SIGN SHALL BE HAWKINS & HAWKINS RIR-30" HIGH INTENSITY, OR APPROVED EQUAL

THE RIR-2 (AR) SHALL BE USED FOR LOCATIONS ON OR ENTRY ONTO A 90 FOOT OR GREATER STREET. THE RIR-1 (AR) SHALL BE USED FOR ALL OTHER INSTALLATIONS.

POST AND BASE:

THE POST AND BASE FOR THE STOP SIGN SHALL CONFORM TO THE SPECIFICATIONS CALLED FOR ON THE STANDARD DETAIL FOR STREET SIGNS.

MOUNTING BRACKET:

STOP SIGNS SHALL BE INSTALLED WITH U-BOLTS AND THEFT-PROOF BOLTS.

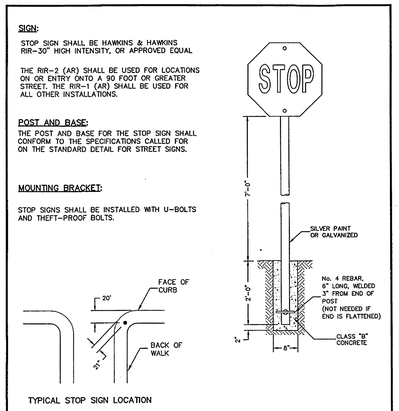

TYPICAL STOP SIGN LOCATION

CITY OF MOUNTAIN VIEW
DEPARTMENT OF PUBLIC WORKS
STANDARD DETAIL

STANDARD STOP SIGN

Drawn: OT Date: 05/06/99
Checked: RK Scale: NTS
APPROVED: Exp. 03-31-01 No. 27089 REGISTERED PROFESSIONAL ENGINEER STATE OF CALIFORNIA
06-29-99 DATE 27089 R.C.E. NO.
FILE NO. A-14

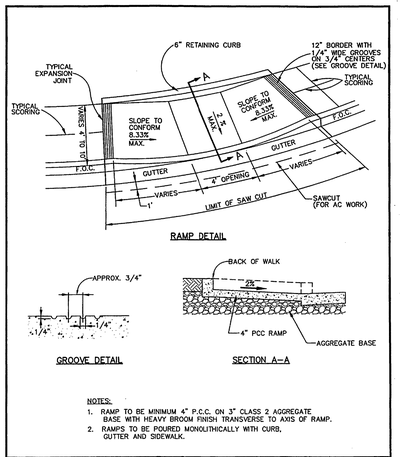

RAMP DETAIL

GROOVE DETAIL

SECTION A–A

NOTES:

1. RAMP TO BE MINIMUM 4" P.C.C. ON 3" CLASS 2 AGGREGATE BASE WITH HEAVY BROOM FINISH TRANSVERSE TO AXIS OF RAMP.
2. RAMPS TO BE POURED MONOLITHICALLY WITH CURB, GUTTER AND SIDEWALK.

CITY OF MOUNTAIN VIEW
DEPARTMENT OF PUBLIC WORKS
STANDARD DETAIL

CURB RAMP FOR MONOLITHIC CURB, GUTTER & SIDEWALK

Drawn: OT Date: 05/06/99
Checked: RK Scale: NTS
APPROVED: Exp. 03-31-01 No. 27089 REGISTERED PROFESSIONAL ENGINEER STATE OF CALIFORNIA
06-29-99 DATE 27089 R.C.E. NO.
FILE NO. A-16

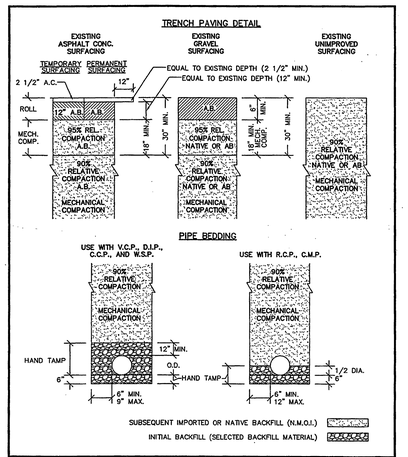

CITY OF MOUNTAIN VIEW
DEPARTMENT OF PUBLIC WORKS
STANDARD DETAIL

TRENCH PAVING, BACKFILL AND PIPE BEDDING SECTIONS

Drawn: OT Date: 05/06/99
Checked: RK Scale: NTS
APPROVED: Exp. 03-31-01 No. 27089 REGISTERED PROFESSIONAL ENGINEER STATE OF CALIFORNIA
06-29-99 DATE 27089 R.C.E. NO.
FILE NO. A-18

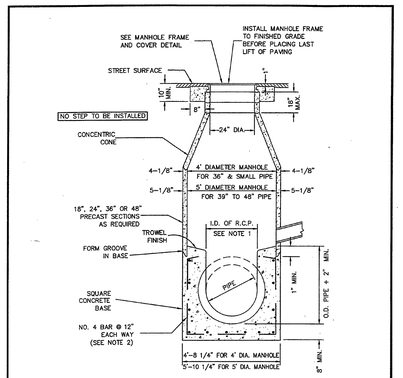

NOTES:

1. LAY PIPE THRU BOTTOM OF MANHOLES. AFTER CONCRETE IN BASE HAS SET, KNOCK OUT PORTION OF PIPE INDICATED WITH DASHED LINES.
2. MANHOLE BASE REINFORCING IS NOT REQUIRED FOR 36" DIAMETER OR SMALLER PIPE.

CITY OF MOUNTAIN VIEW
DEPARTMENT OF PUBLIC WORKS
STANDARD DETAIL

STANDARD STORM DRAIN MANHOLE

Drawn: OT Date: 05/06/99
Checked: RK Scale: NTS
APPROVED: Exp. 03-31-01 No. 27089 REGISTERED PROFESSIONAL ENGINEER STATE OF CALIFORNIA
06-29-99 DATE 27089 R.C.E. NO.
FILE NO. B-1

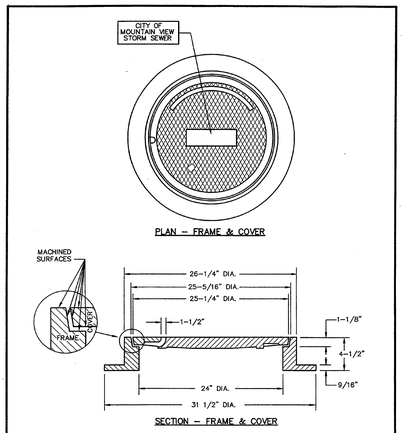

PHOENIX IRON WORKS # P-1090 HANSON SBF 1900

CITY OF MOUNTAIN VIEW
DEPARTMENT OF PUBLIC WORKS
STANDARD DETAIL

STANDARD STORM MANHOLE FRAME & COVER

Drawn: OT Date: 05/06/99
Checked: RK Scale: NTS
APPROVED: Exp. 03-31-01 No. 27089 REGISTERED PROFESSIONAL ENGINEER STATE OF CALIFORNIA
06-29-99 DATE 27089 R.C.E. NO.
FILE NO. B-2

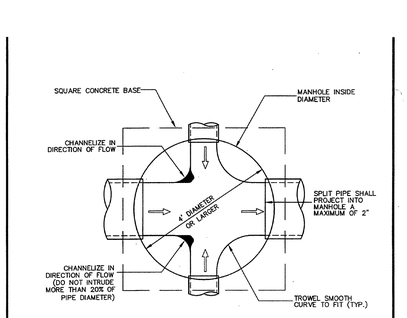

TYPICAL MANHOLE WITH BRANCHES

CITY OF MOUNTAIN VIEW
DEPARTMENT OF PUBLIC WORKS
STANDARD DETAIL

STANDARD STORM MANHOLE BASE WITH BRANCHES

Drawn: OT Date: 05/06/99
Checked: RK Scale: NTS
APPROVED: Exp. 03-31-01 No. 27089 REGISTERED PROFESSIONAL ENGINEER STATE OF CALIFORNIA
06-29-99 DATE 27089 R.C.E. NO.
FILE NO. B-3

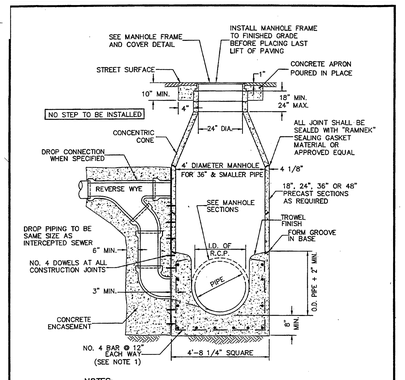

NOTES:

1. MANHOLE BASE REINFORCING IS NOT REQUIRED FOR 36" DIAMETER OR SMALLER.
2. LAY PIPE THRU BOTTOM OF MANHOLES. AFTER CONCRETE IN BASE HAS SET, KNOCK OUT PORTION OF PIPE INDICATED WITH DASHED LINES.

CITY OF MOUNTAIN VIEW
DEPARTMENT OF PUBLIC WORKS
STANDARD DETAIL

STANDARD SANITARY SEWER MANHOLE

Drawn: OT Date: 05/06/99
Checked: RK Scale: NTS
APPROVED: Exp. 03-31-01 No. 27089 REGISTERED PROFESSIONAL ENGINEER STATE OF CALIFORNIA
06-29-99 DATE 27089 R.C.E. NO.
FILE NO. C-1

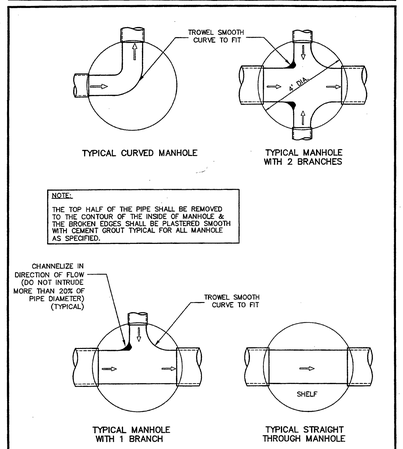

CITY OF MOUNTAIN VIEW
DEPARTMENT OF PUBLIC WORKS
STANDARD DETAIL

SANITARY SEWER STANDARD MANHOLE SECTIONS

Drawn: OT Date: 05/06/99
Checked: RK Scale: NTS
APPROVED: Exp. 03-31-01 No. 27089 REGISTERED PROFESSIONAL ENGINEER STATE OF CALIFORNIA
06-29-99 DATE 27089 R.C.E. NO.
FILE NO. C-2

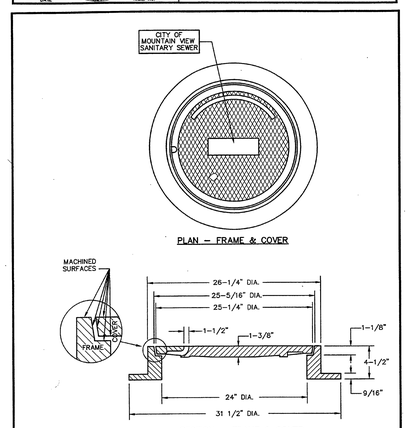

PHOENIX IRON WORKS # P-1090 HANSON SBF 1900

CITY OF MOUNTAIN VIEW
DEPARTMENT OF PUBLIC WORKS
STANDARD DETAIL

STANDARD SANITARY MANHOLE FRAME & COVER

Drawn: OT Date: 05/06/99
Checked: RK Scale: NTS
APPROVED: Exp. 03-31-01 No. 27089 REGISTERED PROFESSIONAL ENGINEER STATE OF CALIFORNIA
06-29-99 DATE 27089 R.C.E. NO.
FILE NO. C-3

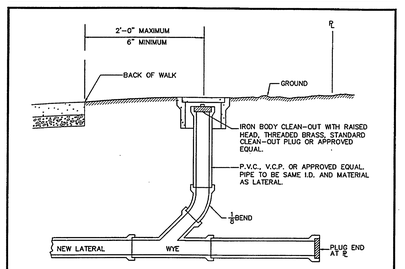

NOTES:

1. ALL CLEAN-OUT BOXES SHALL BE MANUFACTURED BY CHRISTY CONCRETE PRODUCTS WITH THE FOLLOWING SPECIFICATION NUMBERS:

	6" RISER		8" RISER	
	NON-TRAFFIC	TRAFFIC	NON-TRAFFIC	TRAFFIC
BOX	G-8	G-8	G-12	G-12
LID	C-276	C-276	C-280	C-280

2. LIDS SHALL BE MARKED "SEWER"
3. BACKFILL FOR CLEAN-OUTS SHALL BE COMPACTED BY JETTING. TAMPING SHALL NOT BE PERMITTED.
4. LATERAL PIPE SHALL NOT BE CUT. "BANDSEAL" WILL NOT BE ALLOWED IN NEW LATERAL CONSTRUCTION.
5. STAMP FACE OF CURB WITH "S" WHERE LATERAL PASSES UNDER CURB.

CITY OF MOUNTAIN VIEW
DEPARTMENT OF PUBLIC WORKS
STANDARD DETAIL

SEWER LATERAL CLEAN-OUT FOR NEW 6" & 8" LATERALS

Drawn: OT Date: 05/06/99
Checked: RK Scale: NTS
APPROVED: Exp. 03-31-01 No. 27089 REGISTERED PROFESSIONAL ENGINEER STATE OF CALIFORNIA
06-29-99 DATE 27089 R.C.E. NO.
FILE NO. C-6A

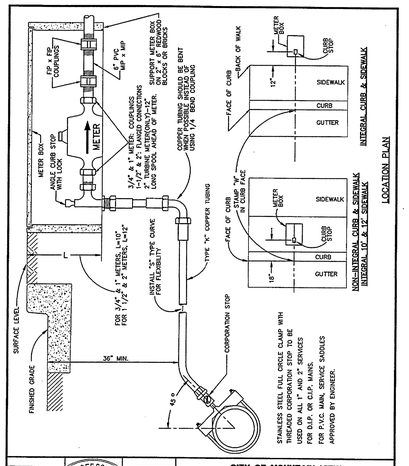

CITY OF MOUNTAIN VIEW
DEPARTMENT OF PUBLIC WORKS
STANDARD DETAIL

STANDARD 1" AND 2" WATER SERVICES WITH 3/4", 1", 1-1/2", AND 2" WATER METERS

Drawn: OT Date: 05/06/99
Checked: RK Scale: NTS
APPROVED: Exp. 03-31-01 No. 27089 REGISTERED PROFESSIONAL ENGINEER STATE OF CALIFORNIA
06-29-99 DATE 27089 R.C.E. NO.
FILE NO. D-1

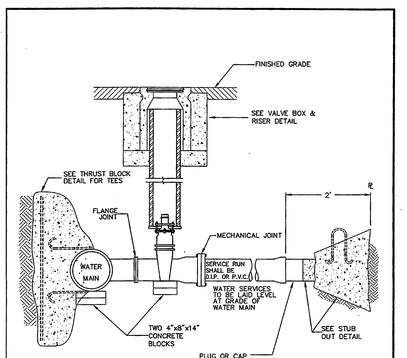

GATE VALVE THRUST BLOCK ANCHOR NOT REQUIRED

CITY OF MOUNTAIN VIEW
DEPARTMENT OF PUBLIC WORKS
STANDARD DETAIL

STANDARD WATER AND FIRE SERVICES LARGER THAN 2"

Drawn: OT Date: 05/06/99
Checked: RK Scale: NTS
APPROVED: Exp. 03-31-01 No. 27089 REGISTERED PROFESSIONAL ENGINEER STATE OF CALIFORNIA
06-29-99 DATE 27089 R.C.E. NO.
FILE NO. D-2

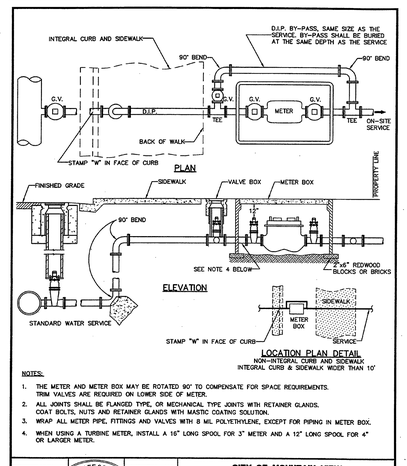

NOTES:

1. THE METER AND METER BOX MAY BE ROTATED 90° TO COMPENSATE FOR SPACE REQUIREMENTS.
2. ALL JOINTS SHALL BE FLANGED TYPE, OR MECHANICAL TYPE JOINTS WITH RETAINER GLANDS. COAT BOLTS, NUTS AND RETAINER GLANDS WITH MASTIC COATING SOLUTION.
3. WRAP ALL METER PIPE, FITTINGS AND VALVES WITH 8 MIL POLYETHYLENE, EXCEPT FOR PIPING IN METER BOX.
4. WHEN USING A TURBINE METER, INSTALL A 16" LONG SPOOL FOR 3" METER AND A 12" LONG SPOOL FOR 4" OR LARGER METER.

CITY OF MOUNTAIN VIEW
DEPARTMENT OF PUBLIC WORKS
STANDARD DETAIL

3" OR LARGER WATER METER INSTALLATION

Drawn: OT Date: 05/06/99
Checked: RK Scale: NTS
APPROVED: Exp. 03-31-01 No. 27089 REGISTERED PROFESSIONAL ENGINEER STATE OF CALIFORNIA
06-29-99 DATE 27089 R.C.E. NO.
FILE NO. D-3

BKF
ENGINEERS / SURVEYORS / PLANNERS
540 PRICE AVENUE
REDWOOD CITY, CA 94063
650-482-6300
650-482-6399 (FAX)

MOUNTAIN VIEW SENIOR CENTER

266 ESCUELA AVENUE
MOUNTAIN VIEW, CA

DATE: APRIL 18, 2005

REVISIONS:

CONSTRUCTION SET

SHEET TITLE:

CITY STANDARD DETAILS

REGISTERED PROFESSIONAL ENGINEER ROBERT A. SCOTT No. 52173 Exp. 12/31/06 CIVIL STATE OF CALIFORNIA

DRAWN BY: BS
CHECKED BY: BS
JOB NO: 200030116

SHEET C6.1

DRAWING NAME: J:\PROJECTS\200116\PAPER\PLOTTED SHEETS\C6.1.dwg
DATE/TIME PLOTTED BY: 04/18/05

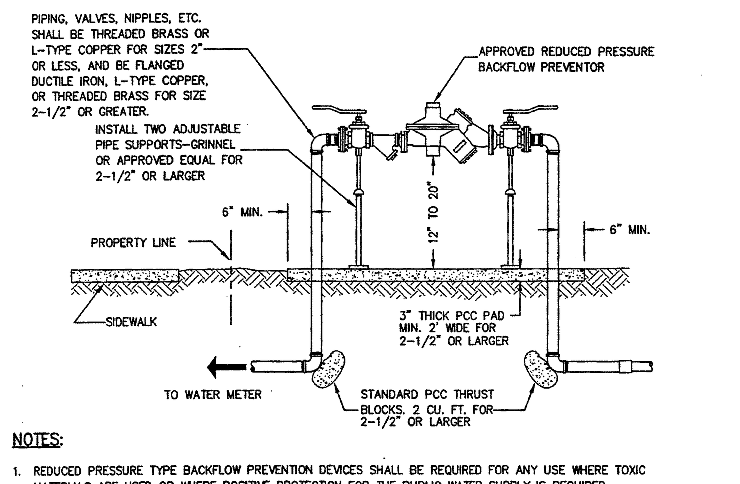

NOTES:

1. REDUCED PRESSURE TYPE BACKFLOW PREVENTION DEVICES SHALL BE REQUIRED FOR ANY USE WHERE TOXIC MATERIALS ARE USED OR WHERE POSITIVE PROTECTION FOR THE PUBLIC WATER SUPPLY IS REQUIRED. TYPICAL APPLICATIONS INCLUDE: HOSPITALS, MEDICAL AND DENTAL LABORATORIES, MORTUARIES, INDUSTRIAL PLANTS, DRY CLEANERS, LANDSCAPE IRRIGATION, OR AS DETERMINED BY THE CITY.
2. APPROVED REDUCED PRESSURE TYPE BACKFLOW PREVENTION DEVICES SHALL BE LISTED IN THE LATEST EDITION OF THE CITY STANDARD PROVISIONS.
3. BACKFLOW PREVENTION DEVICES SHALL BE INSTALLED ADJACENT TO AND ON PROPERTY SIDE OF SIDEWALK WHERE APPLICABLE. THE ASSEMBLY SHALL BE INSTALLED AS CLOSE AS POSSIBLE TO THE WATER METER.
4. ALL DEVICES 3/4" TO 2" WILL HAVE FULL PORT DOMESTIC BALL VALVES, WITH THREADED ENDS. 3" AND LARGER DEVICES WILL HAVE RESILIENT SEATED GATE VALVES, WITH FLANGED ENDS.
5. PRESSURE DIFFERENTIAL VALVE IS TO BE AT LEAST 12" ABOVE GRADE TO A MAXIMUM OF 20".
6. NO CONNECTION BETWEEN THE BACKFLOW PREVENTOR AND WATER METER WILL BE PERMITTED. BACKFLOW PREVENTORS SMALLER THAN 2.5" SHALL BE PLACED DIRECTLY BEHIND THE WATER METERS, UNLESS THERE IS A CONFLICT WITH OTHER UTILITIES, DRIVEWAYS OR SIDEWALKS. BACKFLOW PREVENTORS 2.5" OR LARGER SHALL BE PLACED AS CLOSE TO THE METER AS POSSIBLE, UNLESS AN EXEMPTION IS GRANTED BY THE PUBLIC SERVICES DEPARTMENT. IF AN EXEMPTION IS GRANTED, THE BACK FLOW PREVENTOR SHALL BE SCREENED WITH LANDSCAPING AND THE TRENCHES SHALL BE LEFT OPEN SO THAT THE CITY CAN VERIFY THAT THERE ARE NO CONNECTIONS BETWEEN THE BACKFLOW PREVENTOR AND THE METER. THE CITY RESERVES THE RIGHT TO TEST THE SYSTEM TO ENSURE THAT THESE REQUIREMENTS ARE MET.
7. WHERE A BACKFLOW PREVENTOR IS INSTALLED MORE THAN 8' BEHIND THE WATER OR IRRIGATION METER, THE PIPING BETWEEN THE BACKFLOW PREVENTOR AND THE METER SHALL BE ENCASED IN CONTROLLED DENSITY FILL (CDF).

Revision | Date | Approved
Drawn: QT Date: 05-20-99
Checked: RK Scale: NTS
APPROVED BY: ASSISTANT PUBLIC WORKS DIRECTOR
No. 27089 EXP. 03-31-01

CITY OF MOUNTAIN VIEW
DEPARTMENT OF PUBLIC WORKS
STANDARD DETAIL

REDUCED PRESSURE BACKFLOW PREVENTOR INSTALLATION

FILE NO. D-5

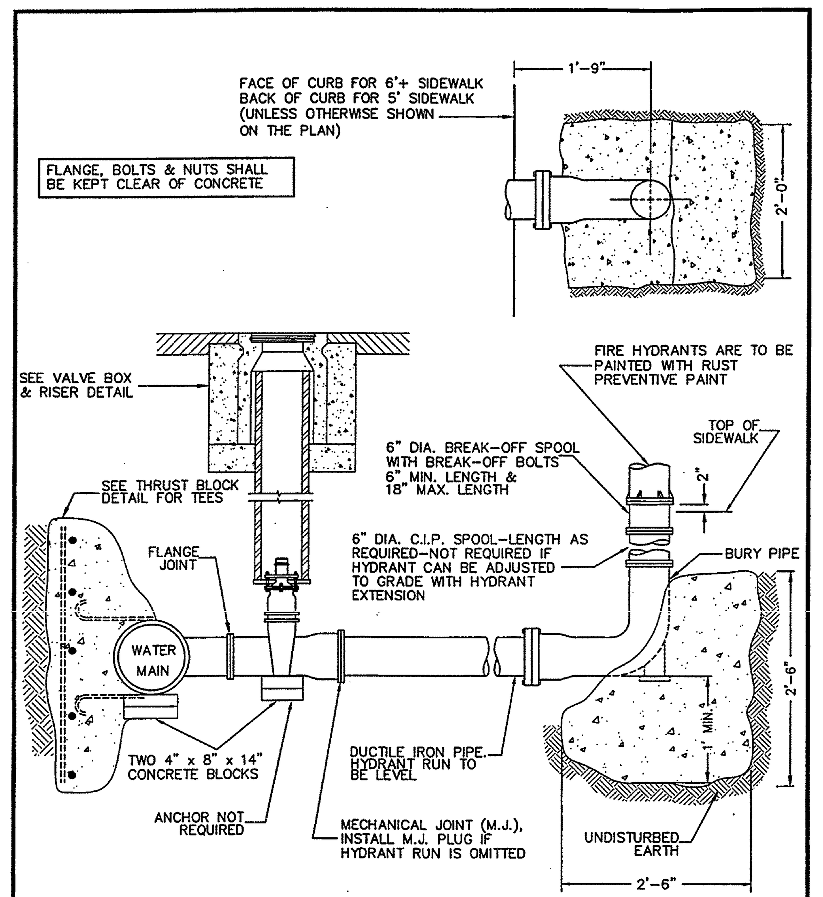

Drawn: QT Date: 05-20-99
Checked: RK Scale: NTS
No. 27089 EXP. 03-31-01

CITY OF MOUNTAIN VIEW
DEPARTMENT OF PUBLIC WORKS
STANDARD DETAIL

STANDARD FIRE HYDRANT INSTALLATION

FILE NO. D-7

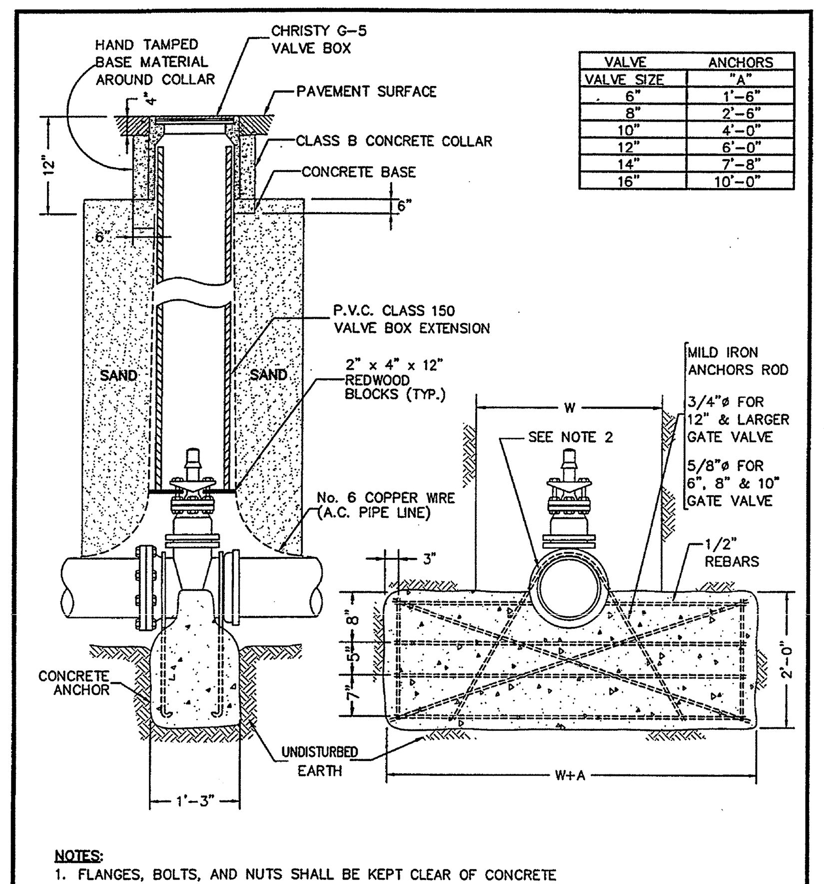

VALVE	ANCHORS
VALVE SIZE	"A"
6"	1'-6"
8"	2'-6"
10"	4'-0"
12"	6'-0"
14"	7'-8"
16"	10'-0"

NOTES:

1. FLANGES, BOLTS, AND NUTS SHALL BE KEPT CLEAR OF CONCRETE
2. COAT EXPOSED PORTIONS OF ANCHOR RODS WITH A MASTIC COATING SOLUTION AND WRAP IN 10 MIL POLYETHYLENE TAPE.

Drawn: QT Date: 05-20-99
Checked: RK Scale: NTS
No. 27089 EXP. 03-31-01

CITY OF MOUNTAIN VIEW
DEPARTMENT OF PUBLIC WORKS
STANDARD DETAIL

STANDARD GATE VALVE BOX AND ANCHOR

FILE NO. D-8

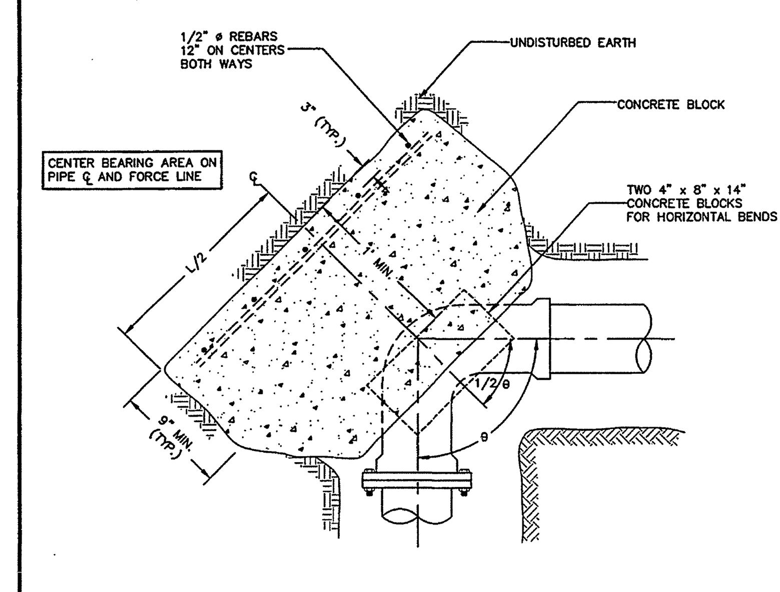

NOTE:

FLANGES, BOLTS, AND NUTS SHALL BE KEPT CLEAR OF CONCRETE

H = HEIGHT
D = WIDTH

PIPE SIZE	REQUIRED AREA - SQ. FT. 5 5/8°	11 1/4°	22 1/2°	45°	90°	DIMENSIONS - L x H 5 5/8°	11 1/4°	22 1/2°	45°	90°
6"	1	1	2	3	5	1'-0" x 1'-0"	1'-0" x 1'-0"	1'-5" x 1'-5"	1'-9" x 1'-9"	2'-3" x 2'-3"
8"	1	1	2	4	8	1'-0" x 1'-0"	1'-0" x 1'-0"	1'-5" x 1'-5"	2'-0" x 2'-0"	2'-10" x 2'-10"
10"	1	2	4	7	12	1'-0" x 1'-0"	1'-5" x 1'-5"	2'-0" x 2'-0"	2'-8" x 2'-8"	3'-5" x 3'-5"
12"	1	3	5	9	17	1'-0" x 1'-0"	1'-9" x 1'-9"	2'-3" x 2'-3"	3'-0" x 3'-0"	4'-2" x 4'-2"
14"	2	3	7	13	23	1'-5" x 1'-5"	1'-9" x 1'-9"	2'-8" x 2'-8"	3'-6" x 3'-6"	4'-10" x 4'-10"
16"	2	4	8	16	29	1'-5" x 1'-5"	2'-0" x 2'-0"	2'-10" x 2'-10"	4'-0" x 4'-0"	5'-5" x 5'-5"

Drawn: QT Date: 05-22-99
Checked: RK Scale: NTS
No. 27089 EXP. 03-31-01

CITY OF MOUNTAIN VIEW
DEPARTMENT OF PUBLIC WORKS
STANDARD DETAIL

STANDARD THRUST BLOCK FOR HORIZONTAL AND VERTICAL DOWNWARD BENDS

FILE NO. D-13

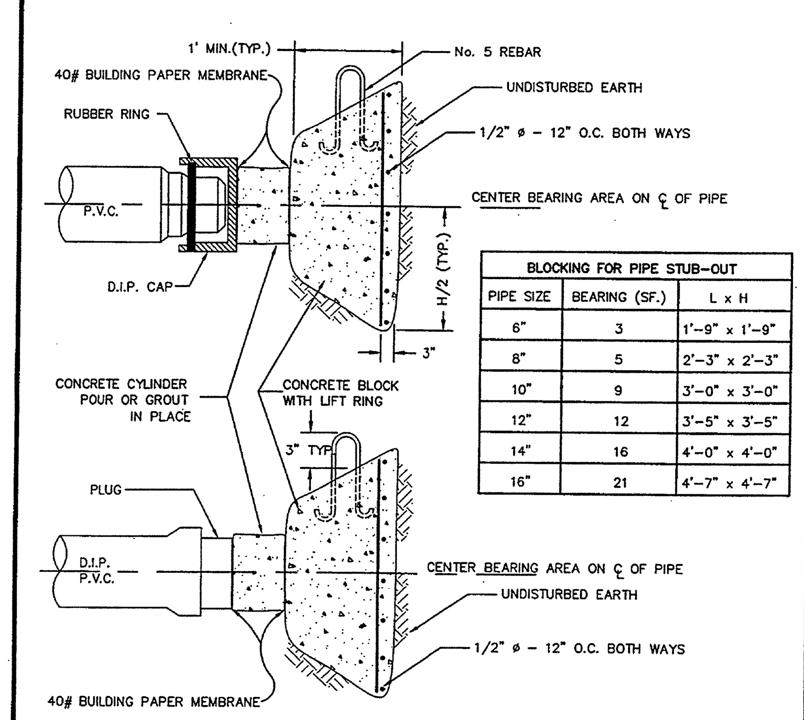

BLOCKING FOR PIPE STUB-OUT		
PIPE SIZE	BEARING (SF.)	L x H
6"	3	1'-9" x 1'-9"
8"	5	2'-3" x 2'-3"
10"	9	3'-0" x 3'-0"
12"	12	3'-5" x 3'-5"
14"	16	4'-0" x 4'-0"
16"	21	4'-7" x 4'-7"

Drawn: QT Date: 05-22-99
Checked: RK Scale: NTS
No. 27089 EXP. 03-31-01

CITY OF MOUNTAIN VIEW
DEPARTMENT OF PUBLIC WORKS
STANDARD DETAIL

STANDARD P.V.C. AND D.I.P. STUB-OUT

FILE NO. D-12

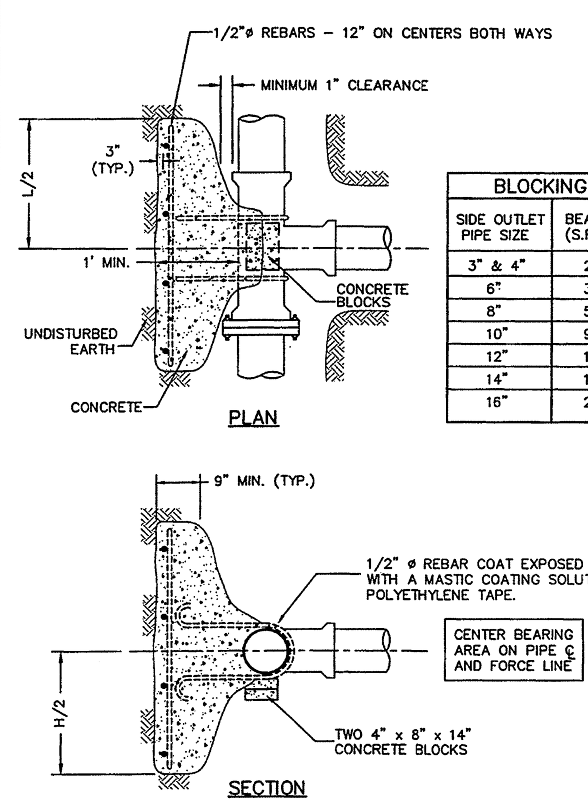

BLOCKING FOR PIPE TEES		
SIDE OUTLET PIPE SIZE	BEARING (S.F.)	L x H
3" & 4"	2	1'-5" x 1'-5"
6"	3	1'-9" x 1'-9"
8"	5	2'-3" x 2'-3"
10"	9	3'-0" x 3'-0"
12"	12	3'-5" x 3'-5"
14"	16	4'-0" x 4'-0"
16"	21	4'-7" x 4'-7"

NOTE:

FLANGES, BOLTS, AND NUTS SHALL BE KEPT CLEAR OF CONCRETE.

Drawn: QT Date: 05-22-99
Checked: RK Scale: NTS
No. 27089 EXP. 03-31-01

CITY OF MOUNTAIN VIEW
DEPARTMENT OF PUBLIC WORKS
STANDARD DETAIL

STANDARD THRUST BLOCK FOR TEES

FILE NO. D-14

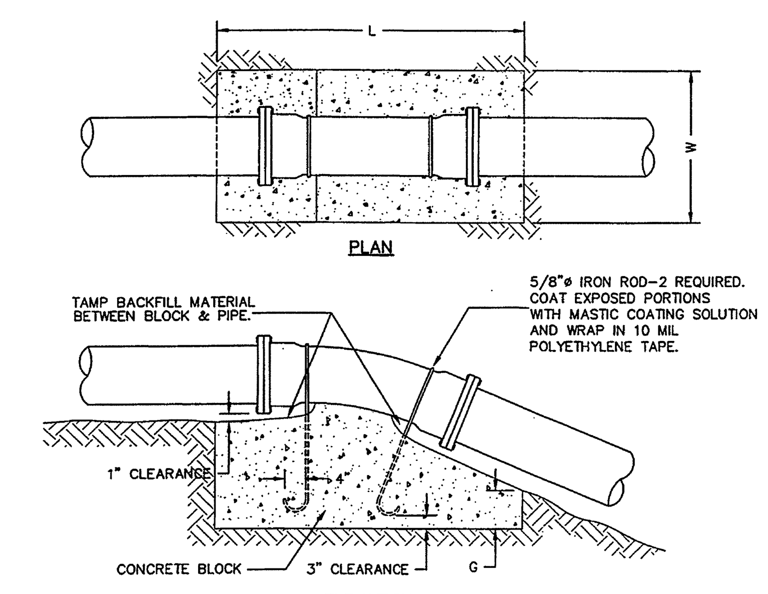

THRUST BLOCK DIMENSION-UPWARD THRUST												
PIPE SIZE	11 1/4° BEND				22 1/2° BEND				45° BEND			
	L	W	H	G	L	W	H	G	L	W	H	G
6"	2'0"	2'0"	1'0"	9"	2'0"	2'0"	2'0"	1'0"	3'0"	2'0"	2'0"	6"
8"	2'0"	2'0"	1'0"	9"	3'0"	2'0"	2'0"	1'0"	4'6"	2'0"	3'0"	6"
10"	3'0"	2'0"	2'0"	1'8"	4'0"	2'0"	2'0"	1'0"	6'0"	2'0"	3'8"	6"
12"	3'0"	2'0"	2'0"	1'8"	6'0"	2'0"	2'0"	1'0"	7'0"	2'6"	4'0"	6"

NOTE:

FLANGES, NUTS AND BOLTS SHALL BE KEEP CLEAR OF CONCRETE.

Drawn: QT Date: 05-22-99
Checked: RK Scale: NTS
No. 27089 EXP. 03-31-01

CITY OF MOUNTAIN VIEW
DEPARTMENT OF PUBLIC WORKS
STANDARD DETAIL

STANDARD ANCHOR FOR UPWARD THRUST

FILE NO. D-15

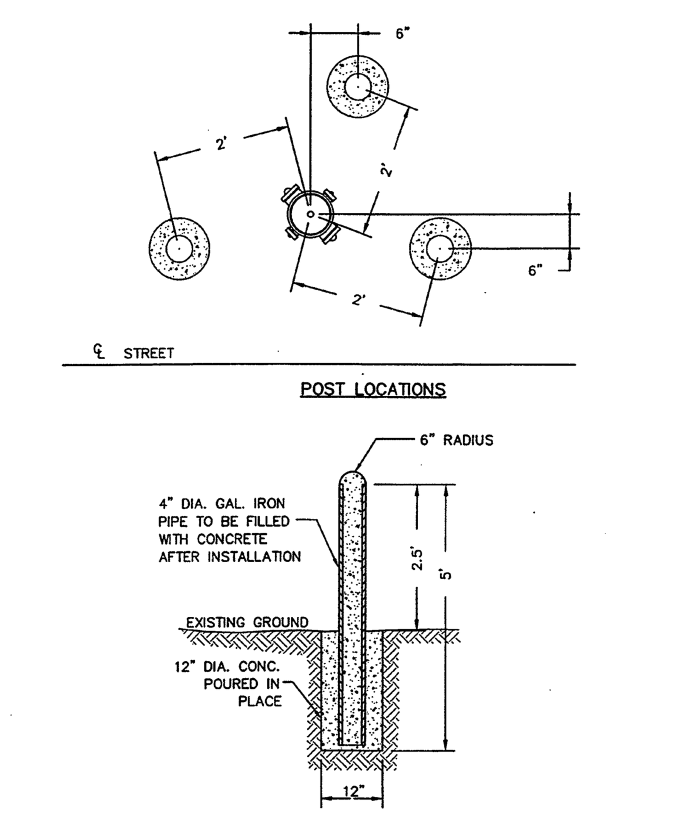

NOTE:

THE 4" IRON PIPE SHALL BE COATED WITH ZINC CHROMATE PRIMER BEFORE INSTALLATION.

Drawn: QT Date: 05-22-99
Checked: RK Scale: NTS
No. 27089 EXP. 03-31-01

CITY OF MOUNTAIN VIEW
DEPARTMENT OF PUBLIC WORKS
STANDARD DETAIL

FIRE HYDRANT GUARD POST

FILE NO. D-17

BKF
ENGINEERS / SURVEYORS / PLANNERS
540 PRICE AVENUE
REDWOOD CITY, CA 94063
650-482-6300
650-482-6399 (FAX)

MOUNTAIN VIEW SENIOR CENTER

266 ESCUELA AVENUE
MOUNTAIN VIEW, CA

DATE: APRIL 18, 2005

REVISIONS:

CONSTRUCTION SET

SHEET TITLE:

CITY STANDARD DETAILS

REGISTERED PROFESSIONAL ENGINEER No. 52173 Exp. 12/31/06 CIVIL STATE OF CALIFORNIA

DRAWN BY: BS
CHECKED BY: BS
JOB NO: 200030116

SHEET C6.2

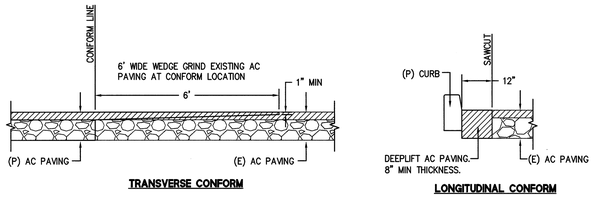

1 **AC CONFORM DETAILS**
N.T.S.

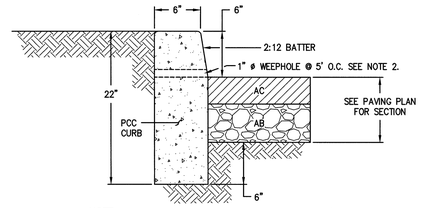

NOTE:

1. PROVIDE EXPANSION JOINTS 20' OC MAX SPACING. CONTROL JOINTS SHALL BE PROVIDED BETWEEN EXPANSION JOINTS AT 10' MAX SPACING.

2. INSTALL WHEEPHOLES WHEN CURB IS DIRECTLY ADJACENT TO A LANDSCAPED AREA.

2 **VERTICAL CURB**
N.T.S.

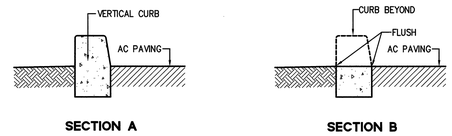

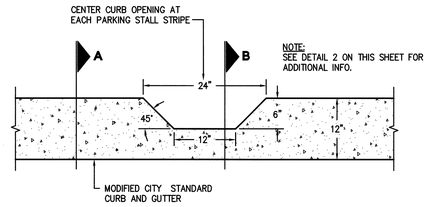

NOTE:
SEE DETAIL 2 ON THIS SHEET FOR ADDITIONAL INFO.

3 **MODIFIED VERTICAL CURB**
N.T.S.

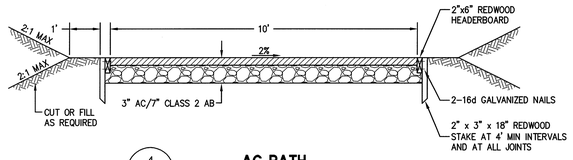

4 **AC PATH**
N.T.S.

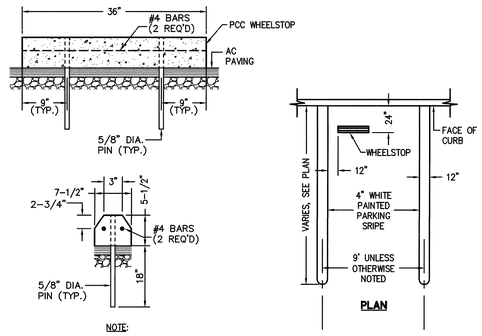

NOTE:

1. WHEELSTOPS TO BE PLACED ONLY WHERE INDICATED ON THE PLANS.

5 **TYPICAL PARKING STALL & PCC WHEELSTOP**
N.T.S.

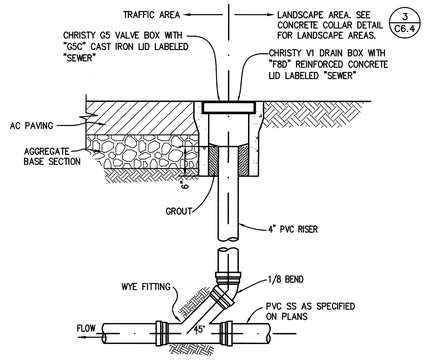

6 **STORM DRAIN CLEANOUT**
N.T.S.

TYPE	A	B	C	MODEL
1	12"	12"	4"	EK
2	18"	18"	4"	CK

NOTES

1. REFER TO SANTA ROSA CAST PRODUCTS OR APPROVED EQUIVALENT.

2. DROP INLETS SHALL BE RATED FOR H20 LOADING AND HAVE A STANDARD HEAVY DUTY FRAME AND GRATE AND SHALL BE PROVIDED WITH A LOCKING DEVICE.

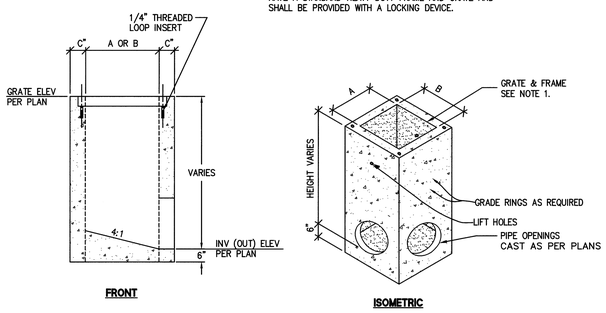

7 **DROP INLET**
N.T.S.

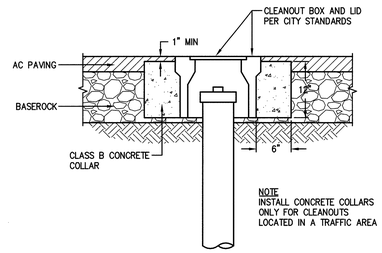

NOTE
INSTALL CONCRETE COLLARS ONLY FOR CLEANOUTS LOCATED IN A TRAFFIC AREA

8 **CONCRETE COLLAR IN PAVED AREAS**
N.T.S.

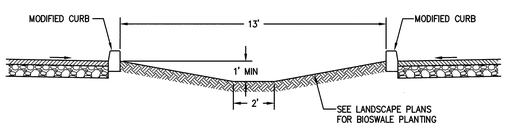

SECTION A-A
N.T.S.

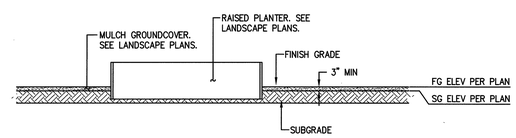

SECTION B-B
N.T.S.

BKF
ENGINEERS / SURVEYORS / PLANNERS
540 PRICE AVENUE
REDWOOD CITY, CA 94063
650-482-6300
650-482-6399 (FAX)

MOUNTAIN VIEW SENIOR CENTER

266 ESCUELA AVENUE
MOUNTAIN VIEW, CA

DATE: APRIL 18, 2005

REVISIONS:

CONSTRUCTION SET

SHEET TITLE:
CONSTRUCTION DETAILS

REGISTERED PROFESSIONAL ENGINEER
ADRIAN WILLIAMS PORTER
No. 52173
Exp. 12/31/06
CIVIL
STATE OF CALIFORNIA

DRAWN BY: BS
CHECKED BY: BS
JOB NO: 200030116

SHEET
C6.3

DRAWING NAME: J:\Projects\200030116\DWG\PLOTTED SHEETS\CR-3.dwg
DATE/TIME: 4/18/05 9:41
PLOTTED BY:

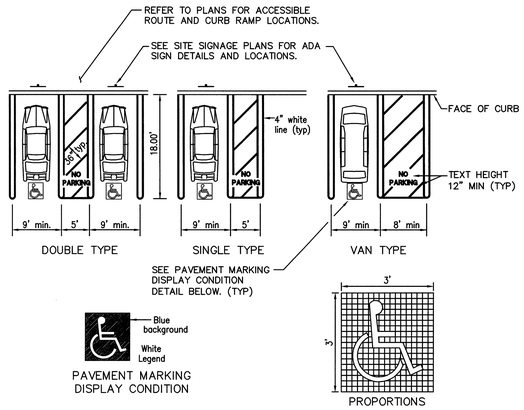

1 **ACCESSIBLE PARKING**

N.T.S.

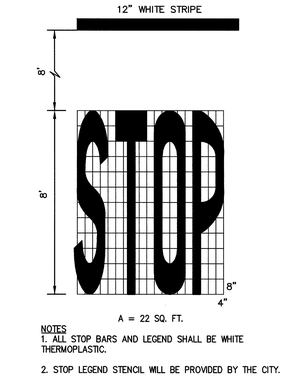

NOTES
1. ALL STOP BARS AND LEGEND SHALL BE WHITE THERMOPLASTIC.
2. STOP LEGEND STENCIL WILL BE PROVIDED BY THE CITY.

2 **STOP BAR AND LEGEND**

N.T.S.

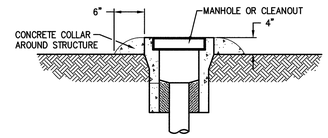

3 **MANHOLE/CLEANOUT CONCRETE COLLAR IN LANDSCAPE AREAS**

N.T.S.

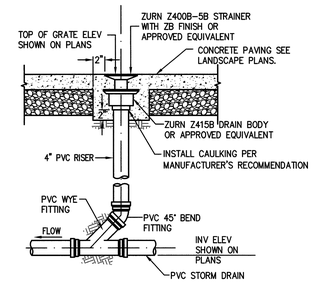

4 **AREA DRAIN**

N.T.S.

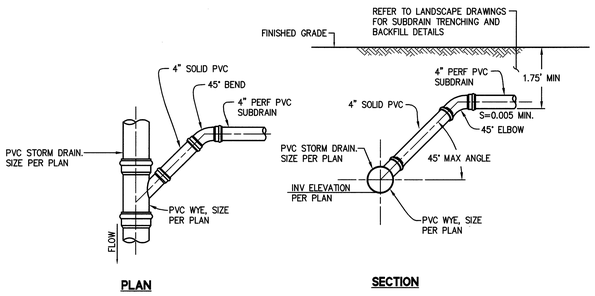

5 **SUBDRAIN CONNECTIONS**

N.T.S.

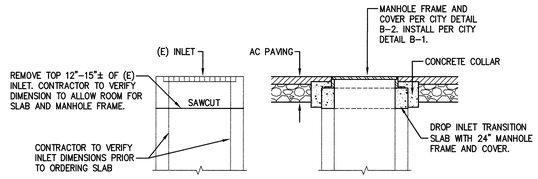

6 **DROP INLET TRANSITION SLAB**

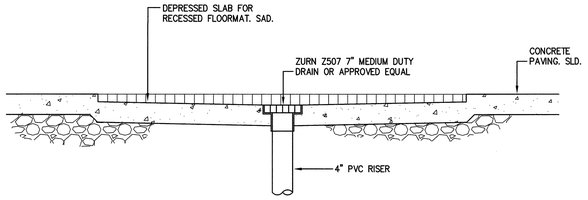

7 **FLOOR DRAIN FOR DEPRESSED SLAB**

BKF
ENGINEERS / SURVEYORS / PLANNERS
540 PRICE AVENUE
REDWOOD CITY, CA 94063
650-482-6300
650-482-6399 (FAX)

MOUNTAIN VIEW SENIOR CENTER

266 ESCUELA AVENUE
MOUNTAIN VIEW, CA

DATE: APRIL 18, 2005

REVISIONS:

CONSTRUCTION SET

SHEET TITLE:

CONSTRUCTION DETAILS

REGISTERED PROFESSIONAL ENGINEER
ASHWANI GUPTA
No. 52173
Exp. 12/31/06
CIVIL
STATE OF CALIFORNIA

DRAWN BY: BS
CHECKED BY: BS
JOB NO: 200030116

SHEET
C6.4