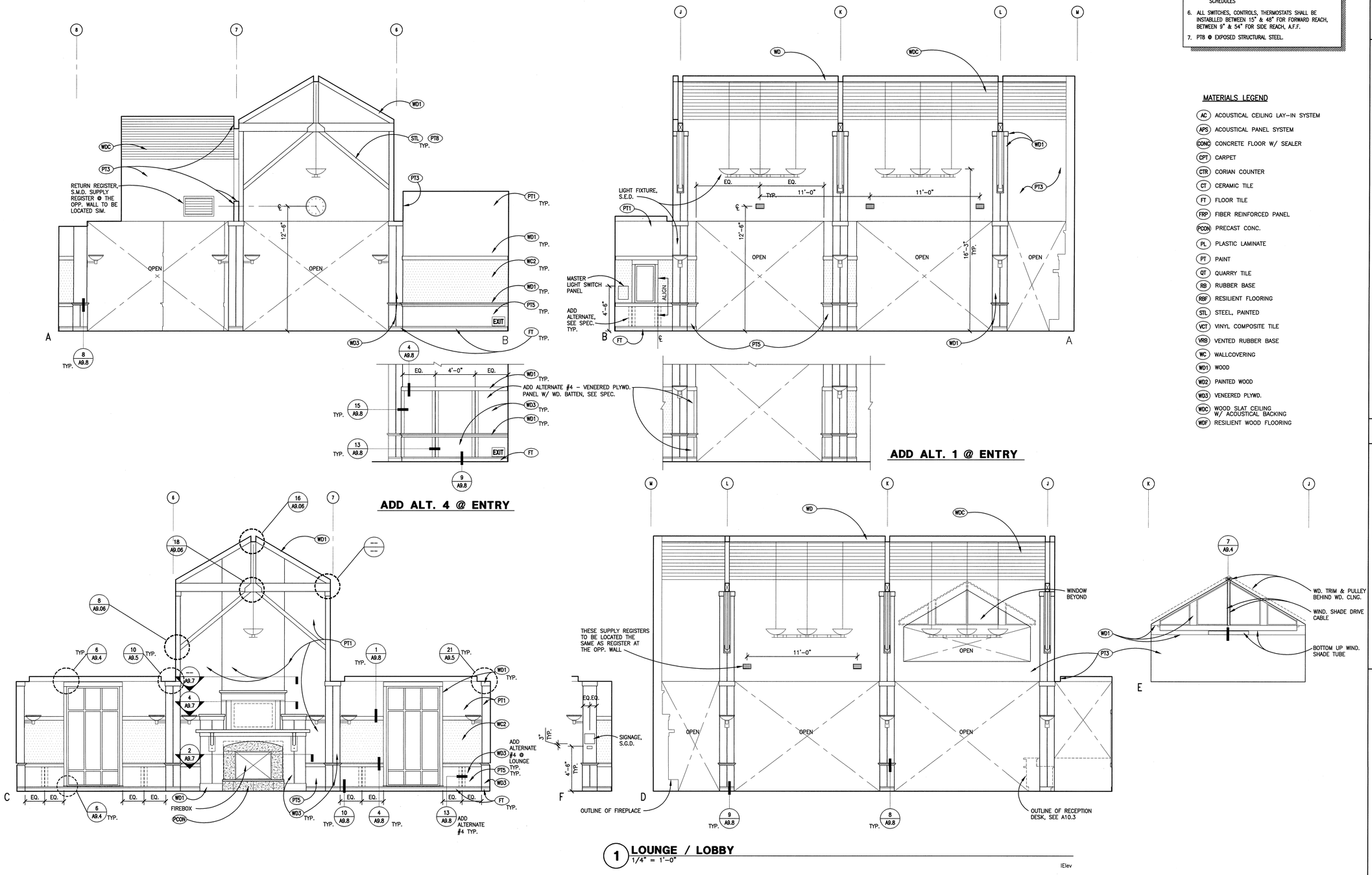

1 LOUNGE / LOBBY
1/4" = 1'-0"

IElev

GENERAL NOTES

1. ALL DIMENSIONS IN PLAN ARE INDICATED FROM THE GRID LINE TO FACE OF STUD, UNLESS OTHERWISE NOTED.
2. ALL DIMENSIONS IN ENLARGED PLAN ARE INDICATED FROM THE GRID LINE TO FACE OF FINISH, UNLESS OTHERWISE NOTED.
3. ALL DIMENSIONS IN ELEVATION ARE FROM: FINISH FLOOR ELEVATION, FACE OF FINISH WALL OR BLOCK WALL, UNLESS OTHERWISE NOTED.
4. SEE SCHEDULES FOR HM DOOR & WINDOW COLORS
5. XXX FINISH SYMBOL – FOR FINISHES, REFER TO FINISH SCHEDULES
6. ALL SWITCHES, CONTROLS, THERMOSTATS SHALL BE INSTABLLED BETWEEN 15" & 48" FOR FORWARD REACH, BETWEEN 9" & 54" FOR SIDE REACH, A.F.F.
7. PT8 @ EXPOSED STRUCTURAL STEEL.

MATERIALS LEGEND

- AC ACOUSTICAL CEILING LAY-IN SYSTEM
- APS ACOUSTICAL PANEL SYSTEM
- CONC CONCRETE FLOOR W/ SEALER
- CPT CARPET
- CTR CORIAN COUNTER
- CT CERAMIC TILE
- FT FLOOR TILE
- FRP FIBER REINFORCED PANEL
- PCON PRECAST CONC.
- PL PLASTIC LAMINATE
- PT PAINT
- QT QUARRY TILE
- RB RUBBER BASE
- RBF RESILIENT FLOORING
- STL STEEL, PAINTED
- VCT VINYL COMPOSITE TILE
- VRB VENTED RUBBER BASE
- WC WALLCOVERING
- WD1 WOOD
- WD2 PAINTED WOOD
- WD3 VENEERED PLYWD.
- WDC WOOD SLAT CEILING W/ ACOUSTICAL BACKING
- WDF RESILIENT WOOD FLOORING

BSA ARCHITECTS
A California Corporation
501 Folsom Street, Fourth Floor
San Francisco, CA 94105
415-281-4720

LICENSED ARCHITECT
No. C26056
REN. 6-30-06
STATE OF CALIFORNIA

MOUNTAIN VIEW SENIOR CENTER

266 ESCUELA AVE
MOUNTAIN VIEW, CA

DATE: APRIL 18, 2005

REVISIONS: –

CONSTRUCTION SET

SHEET TITLE:

INTERIOR ELEVATIONS

© 2005 BSA Architects
"All drawings and written material appearing herein constitute the original and unpublished work of the architect and the same may not be duplicated, used, or disclosed without the written consent of the architect."

DRAWN BY: WC
CHECKED BY: GJ
JOB NO: 0314.10

SHEET A5.1

6-4-04 A05-01.DWG

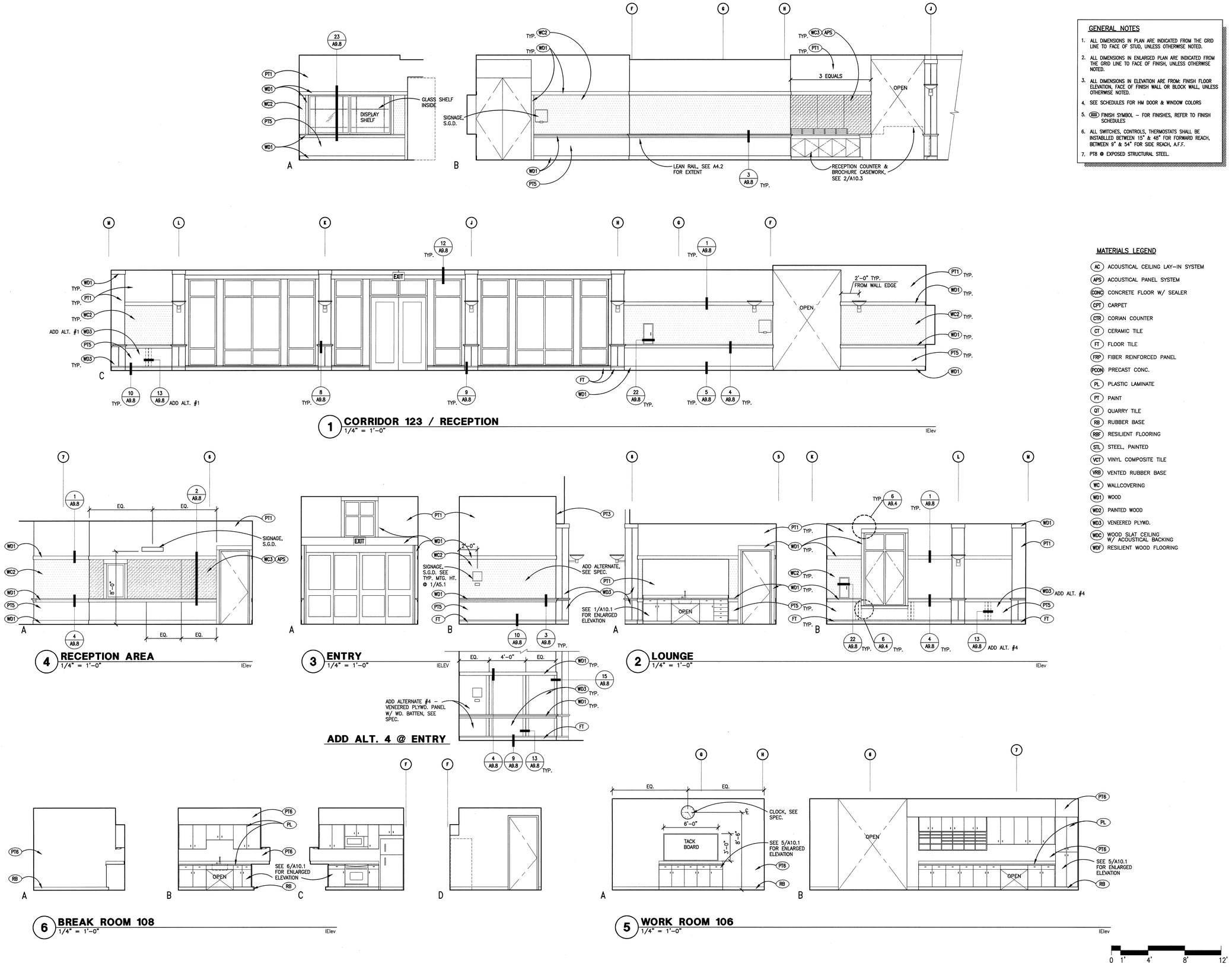

1 CORRIDOR 123 / RECEPTION
1/4" = 1'-0"

4 RECEPTION AREA
1/4" = 1'-0"

3 ENTRY
1/4" = 1'-0"

2 LOUNGE
1/4" = 1'-0"

ADD ALT. 4 @ ENTRY

6 BREAK ROOM 108
1/4" = 1'-0"

5 WORK ROOM 106
1/4" = 1'-0"

GENERAL NOTES

1. ALL DIMENSIONS IN PLAN ARE INDICATED FROM THE GRID LINE TO FACE OF STUD, UNLESS OTHERWISE NOTED.
2. ALL DIMENSIONS IN ENLARGED PLAN ARE INDICATED FROM THE GRID LINE TO FACE OF FINISH, UNLESS OTHERWISE NOTED.
3. ALL DIMENSIONS IN ELEVATION ARE FROM: FINISH FLOOR ELEVATION, FACE OF FINISH WALL OR BLOCK WALL, UNLESS OTHERWISE NOTED.
4. SEE SCHEDULES FOR HM DOOR & WINDOW COLORS
5. XXX FINISH SYMBOL – FOR FINISHES, REFER TO FINISH SCHEDULES
6. ALL SWITCHES, CONTROLS, THERMOSTATS SHALL BE INSTABLLED BETWEEN 15" & 48" FOR FORWARD REACH, BETWEEN 9" & 54" FOR SIDE REACH, A.F.F.
7. PT8 @ EXPOSED STRUCTURAL STEEL.

MATERIALS LEGEND

- AC ACOUSTICAL CEILING LAY-IN SYSTEM
- APS ACOUSTICAL PANEL SYSTEM
- CONC CONCRETE FLOOR W/ SEALER
- CPT CARPET
- CTR CORIAN COUNTER
- CT CERAMIC TILE
- FT FLOOR TILE
- FRP FIBER REINFORCED PANEL
- PCON PRECAST CONC.
- PL PLASTIC LAMINATE
- PT PAINT
- QT QUARRY TILE
- RB RUBBER BASE
- RBF RESILIENT FLOORING
- STL STEEL, PAINTED
- VCT VINYL COMPOSITE TILE
- VRB VENTED RUBBER BASE
- WC WALLCOVERING
- WD1 WOOD
- WD2 PAINTED WOOD
- WD3 VENEERED PLYWD.
- WDC WOOD SLAT CEILING W/ ACOUSTICAL BACKING
- WDF RESILIENT WOOD FLOORING

0 1' 4' 8' 12'

BSA ARCHITECTS
A California Corporation
501 Folsom Street, Fourth Floor
San Francisco, CA 94105
415-281-4720

LICENSED ARCHITECT
No. C26056
REN. 6-30-06
STATE OF CALIFORNIA

MOUNTAIN VIEW SENIOR CENTER

266 ESCUELA AVE
MOUNTAIN VIEW, CA

DATE: APRIL 18, 2005

REVISIONS: –

CONSTRUCTION SET

SHEET TITLE:

INTERIOR ELEVATIONS

© 2005 BSA Architects
"All drawings and written material appearing herein constitute the original and unpublished work of the architect and the same may not be duplicated, used, or disclosed without the written consent of the architect."

DRAWN BY:
CHECKED BY:
JOB NO: 0314.10

SHEET A5.2

6-4-04 A05-02.DWG

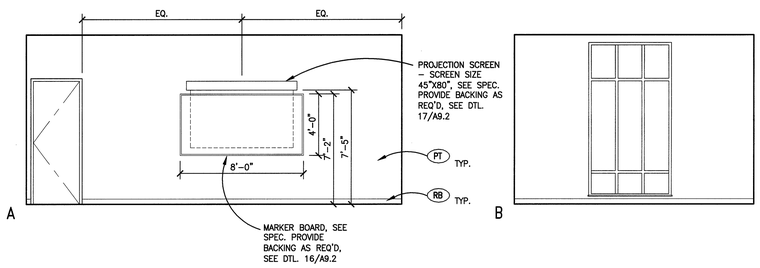

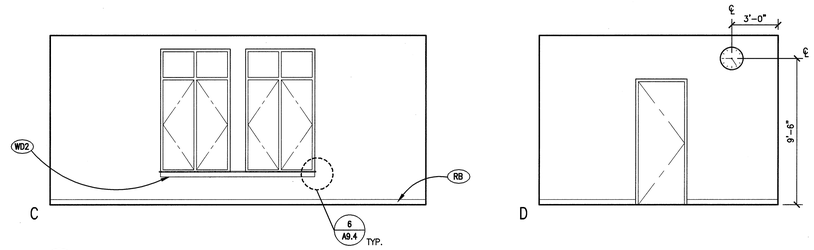

1 MEETING ROOM 111
1/4" = 1'-0"

IElev

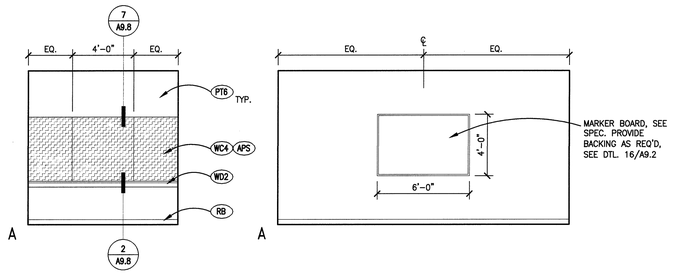

3 CONFERENCE 104
1/4" = 1'-0"

IElev

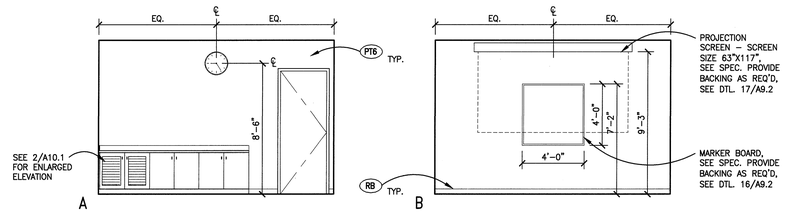

2 TECH 121
1/4" = 1'-0"

IElev

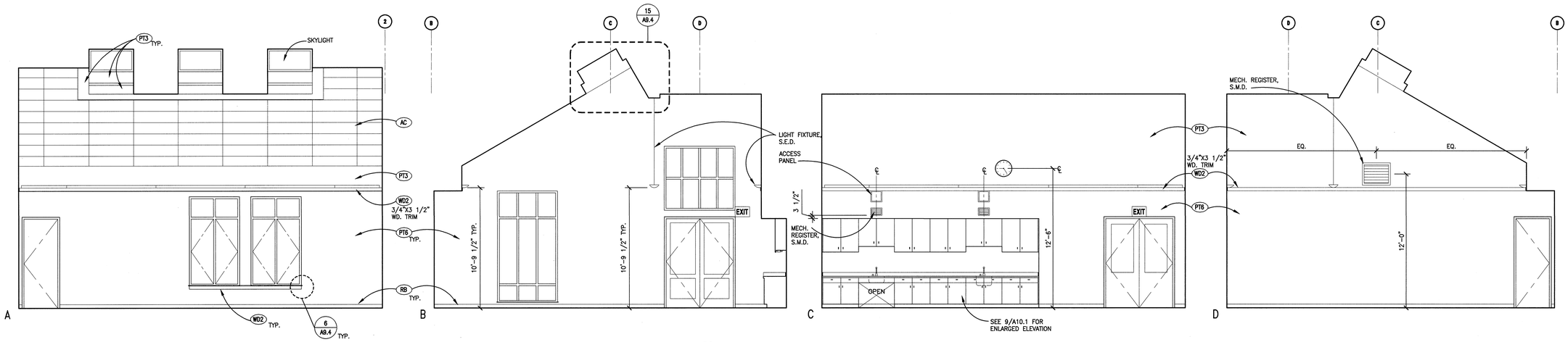

4 ARTS & CRAFTS 113
1/4" = 1'-0"

IElev

0 1' 4' 8' 12'

GENERAL NOTES

1. ALL DIMENSIONS IN PLAN ARE INDICATED FROM THE GRID LINE TO FACE OF STUD, UNLESS OTHERWISE NOTED.
2. ALL DIMENSIONS IN ENLARGED PLAN ARE INDICATED FROM THE GRID LINE TO FACE OF FINISH, UNLESS OTHERWISE NOTED.
3. ALL DIMENSIONS IN ELEVATION ARE FROM: FINISH FLOOR ELEVATION, FACE OF FINISH WALL OR BLOCK WALL, UNLESS OTHERWISE NOTED.
4. SEE SCHEDULES FOR HM DOOR & WINDOW COLORS
5. (XXX) FINISH SYMBOL – FOR FINISHES, REFER TO FINISH SCHEDULES
6. ALL SWITCHES, CONTROLS, THERMOSTATS SHALL BE INSTABLLED BETWEEN 15" & 48" FOR FORWARD REACH, BETWEEN 9" & 54" FOR SIDE REACH, A.F.F.
7. PT8 @ EXPOSED STRUCTURAL STEEL.

MATERIALS LEGEND

- AC ACOUSTICAL CEILING LAY–IN SYSTEM
- APS ACOUSTICAL PANEL SYSTEM
- CONC CONCRETE FLOOR W/ SEALER
- CPT CARPET
- CTR CORIAN COUNTER
- CT CERAMIC TILE
- FT FLOOR TILE
- FRP FIBER REINFORCED PANEL
- PCON PRECAST CONC.
- PL PLASTIC LAMINATE
- PT PAINT
- QT QUARRY TILE
- RB RUBBER BASE
- RBF RESILIENT FLOORING
- STL STEEL, PAINTED
- VCT VINYL COMPOSITE TILE
- VRB VENTED RUBBER BASE
- WC WALLCOVERING
- WD1 WOOD
- WD2 PAINTED WOOD
- WD3 VENEERED PLYWD.
- WDC WOOD SLAT CEILING W/ ACOUSTICAL BACKING
- WDF RESILIENT WOOD FLOORING

BSA ARCHITECTS
A California Corporation
501 Foisom Street, Fourth Floor
San Francisco, CA 94105
415-281-4720

LICENSED ARCHITECT GAYLON JAMES No. C26056 REN. 8-30-05 STATE OF CALIFORNIA

MOUNTAIN VIEW SENIOR CENTER

266 ESCUELA AVE
MOUNTAIN VIEW, CA

DATE: APRIL 18, 2005

REVISIONS: –

CONSTRUCTION SET

SHEET TITLE:

INTERIOR ELEVATIONS

© 2005 BSA Architects
"All drawings and written material appearing herein constitute the original and unpublished work of the architect and the same may not be duplicated, used, or disclosed without the written consent of the architect."

DRAWN BY: WC
CHECKED BY: GJ
JOB NO: 0314.10

SHEET A5.3

6-4-04 A05-03.DWG

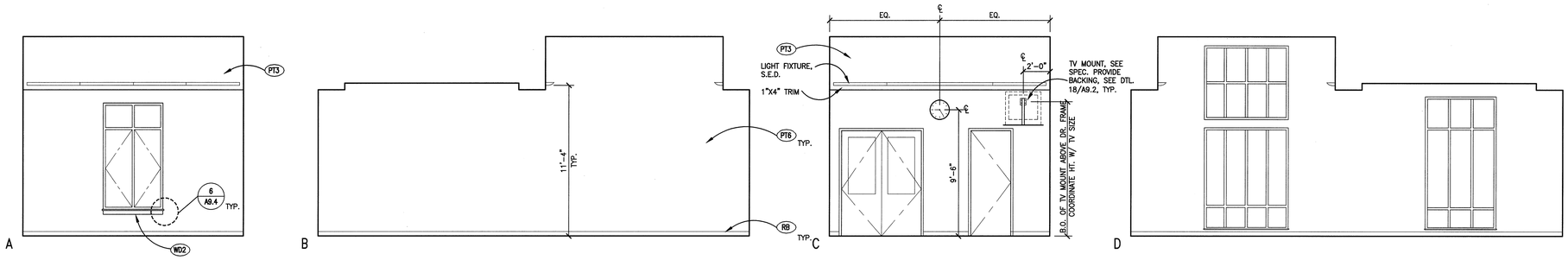

1 EXERCISE ROOM 138
1/4" = 1'-0"

IElev

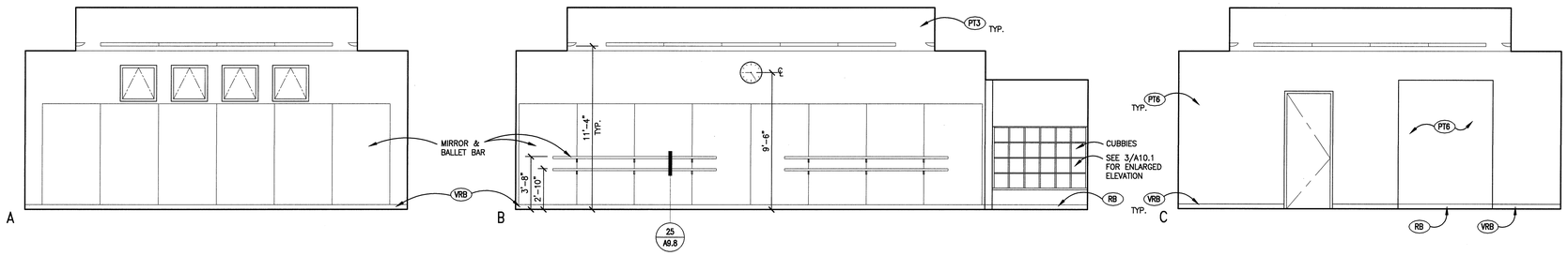

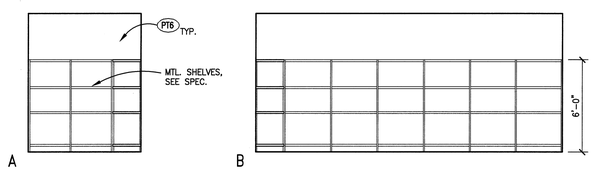

3 STORAGE 114
1/4" = 1'-0"

IElev

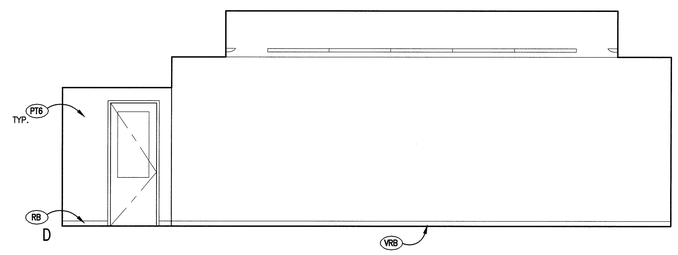

2 MOVEMENT DANCE 135
1/4" = 1'-0"

IElev

GENERAL NOTES

1. ALL DIMENSIONS IN PLAN ARE INDICATED FROM THE GRID LINE TO FACE OF STUD, UNLESS OTHERWISE NOTED.
2. ALL DIMENSIONS IN ENLARGED PLAN ARE INDICATED FROM THE GRID LINE TO FACE OF FINISH, UNLESS OTHERWISE NOTED.
3. ALL DIMENSIONS IN ELEVATION ARE FROM: FINISH FLOOR ELEVATION, FACE OF FINISH WALL OR BLOCK WALL, UNLESS OTHERWISE NOTED.
4. SEE SCHEDULES FOR HM DOOR & WINDOW COLORS
5. (XXX) FINISH SYMBOL – FOR FINISHES, REFER TO FINISH SCHEDULES
6. ALL SWITCHES, CONTROLS, THERMOSTATS SHALL BE INSTABLLED BETWEEN 15" & 48" FOR FORWARD REACH, BETWEEN 9" & 54" FOR SIDE REACH, A.F.F.
7. PT8 @ EXPOSED STRUCTURAL STEEL.

MATERIALS LEGEND

- (AC) ACOUSTICAL CEILING LAY-IN SYSTEM
- (APS) ACOUSTICAL PANEL SYSTEM
- (CONC) CONCRETE FLOOR W/ SEALER
- (CPT) CARPET
- (CTR) CORIAN COUNTER
- (CT) CERAMIC TILE
- (FT) FLOOR TILE
- (FRP) FIBER REINFORCED PANEL
- (PCON) PRECAST CONC.
- (PL) PLASTIC LAMINATE
- (PT) PAINT
- (QT) QUARRY TILE
- (RB) RUBBER BASE
- (RBF) RESILIENT FLOORING
- (STL) STEEL, PAINTED
- (VCT) VINYL COMPOSITE TILE
- (VRB) VENTED RUBBER BASE
- (WC) WALLCOVERING
- (WD1) WOOD
- (WD2) PAINTED WOOD
- (WD3) VENEERED PLYWD.
- (WDC) WOOD SLAT CEILING W/ ACOUSTICAL BACKING
- (WDF) RESILIENT WOOD FLOORING

BSA ARCHITECTS
A California Corporation
501 Folsom Street, Fourth Floor
San Francisco, CA 94105
415-281-4720

LICENSED ARCHITECT GUYON JOHN BRUNSKILL No. C26056 REN. 6-30-06 STATE OF CALIFORNIA

MOUNTAIN VIEW SENIOR CENTER

266 ESCUELA AVE
MOUNTAIN VIEW, CA

DATE: APRIL 18, 2005

REVISIONS: –

CONSTRUCTION SET

SHEET TITLE:

INTERIOR ELEVATIONS

© 2005 BSA Architects
"All drawings and written material appearing herein constitute the original and unpublished work of the architect and the same may not be duplicated, used, or disclosed without the written consent of the architect."

DRAWN BY: WC
CHECKED BY: GJ
JOB NO: 0314.10

SHEET
A5.4

6-4-04 A05-04.DWG

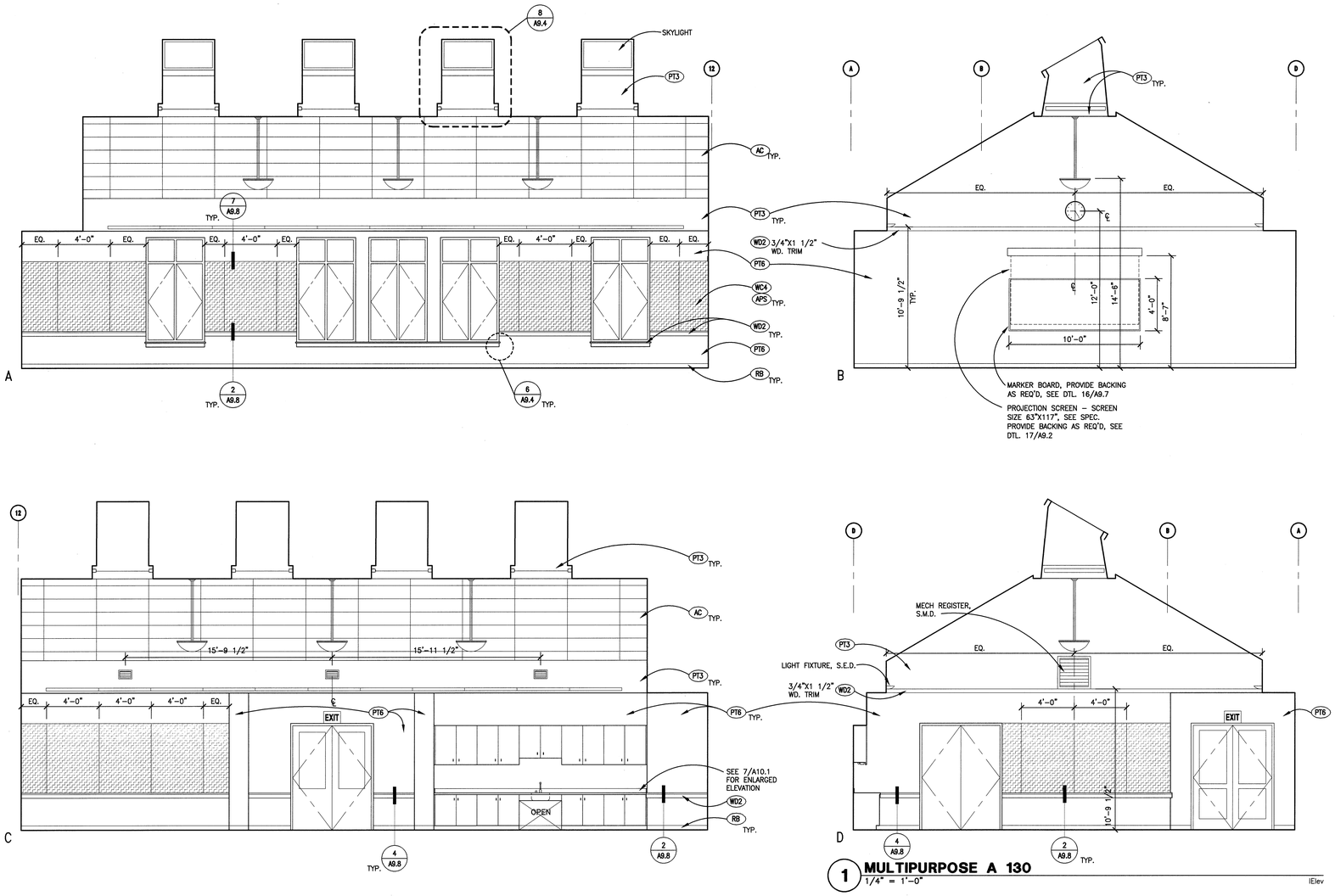

1 **MULTIPURPOSE A 130**
1/4" = 1'-0"
IElev

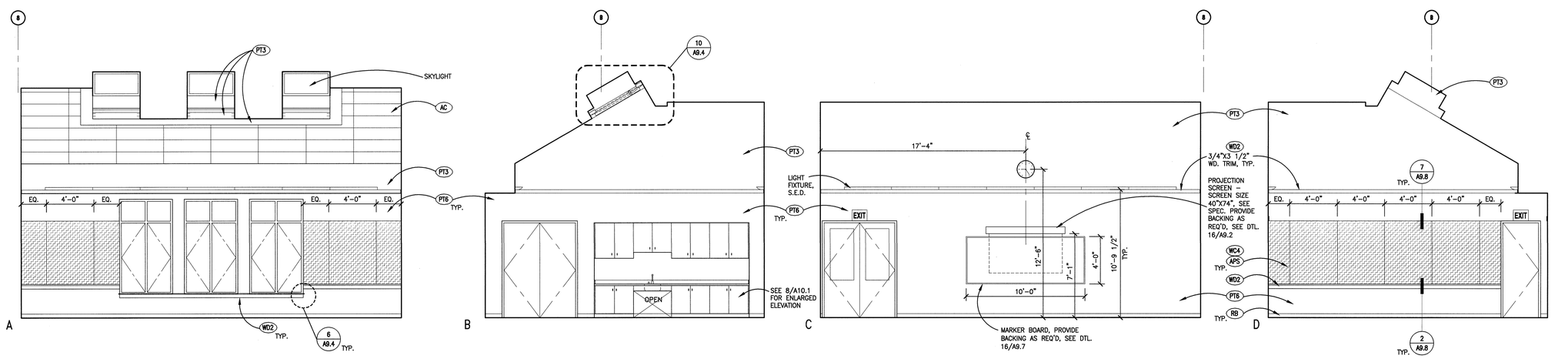

2 **MULTIPURPOSE B 120**
1/4" = 1'-0"
IElev

0 1' 4' 8' 12'

GENERAL NOTES

1. ALL DIMENSIONS IN PLAN ARE INDICATED FROM THE GRID LINE TO FACE OF STUD, UNLESS OTHERWISE NOTED.
2. ALL DIMENSIONS IN ENLARGED PLAN ARE INDICATED FROM THE GRID LINE TO FACE OF FINISH, UNLESS OTHERWISE NOTED.
3. ALL DIMENSIONS IN ELEVATION ARE FROM: FINISH FLOOR ELEVATION, FACE OF FINISH WALL OR BLOCK WALL, UNLESS OTHERWISE NOTED.
4. SEE SCHEDULES FOR HM DOOR & WINDOW COLORS
5. (XXX) FINISH SYMBOL – FOR FINISHES, REFER TO FINISH SCHEDULES
6. ALL SWITCHES, CONTROLS, THERMOSTATS SHALL BE INSTABLLED BETWEEN 15" & 48" FOR FORWARD REACH, BETWEEN 9" & 54" FOR SIDE REACH, A.F.F.
7. PT8 @ EXPOSED STRUCTURAL STEEL.

MATERIALS LEGEND

- (AC) ACOUSTICAL CEILING LAY-IN SYSTEM
- (APS) ACOUSTICAL PANEL SYSTEM
- (CONC) CONCRETE FLOOR W/ SEALER
- (CPT) CARPET
- (CTR) CORIAN COUNTER
- (CT) CERAMIC TILE
- (FT) FLOOR TILE
- (FRP) FIBER REINFORCED PANEL
- (PCON) PRECAST CONC.
- (PL) PLASTIC LAMINATE
- (PT) PAINT
- (QT) QUARRY TILE
- (RB) RUBBER BASE
- (RBF) RESILIENT FLOORING
- (STL) STEEL, PAINTED
- (VCT) VINYL COMPOSITE TILE
- (VRB) VENTED RUBBER BASE
- (WC) WALLCOVERING
- (WD1) WOOD
- (WD2) PAINTED WOOD
- (WD3) VENEERED PLYWD.
- (WDC) WOOD SLAT CEILING W/ ACOUSTICAL BACKING
- (WDF) RESILIENT WOOD FLOORING

BSA ARCHITECTS
A California Corporation
501 Folsom Street, Fourth Floor
San Francisco, CA 94105
415-281-4720

LICENSED ARCHITECT GJ GJOSTA & ASSOC. No. C26056 REN. 8-30-05 STATE OF CALIFORNIA

MOUNTAIN VIEW SENIOR CENTER

266 ESCUELA AVE
MOUNTAIN VIEW, CA

DATE: APRIL 18, 2005

REVISIONS: –

CONSTRUCTION SET

SHEET TITLE:

INTERIOR ELEVATIONS

© 2005 BSA Architects
"All drawings and written material appearing herein constitute the original and unpublished work of the architect and the same may not be duplicated, used, or disclosed without the written consent of the architect."

DRAWN BY: WC
CHECKED BY: GJ
JOB NO: 0314.10

SHEET A5.5

6-4-04 A05-05.DWG

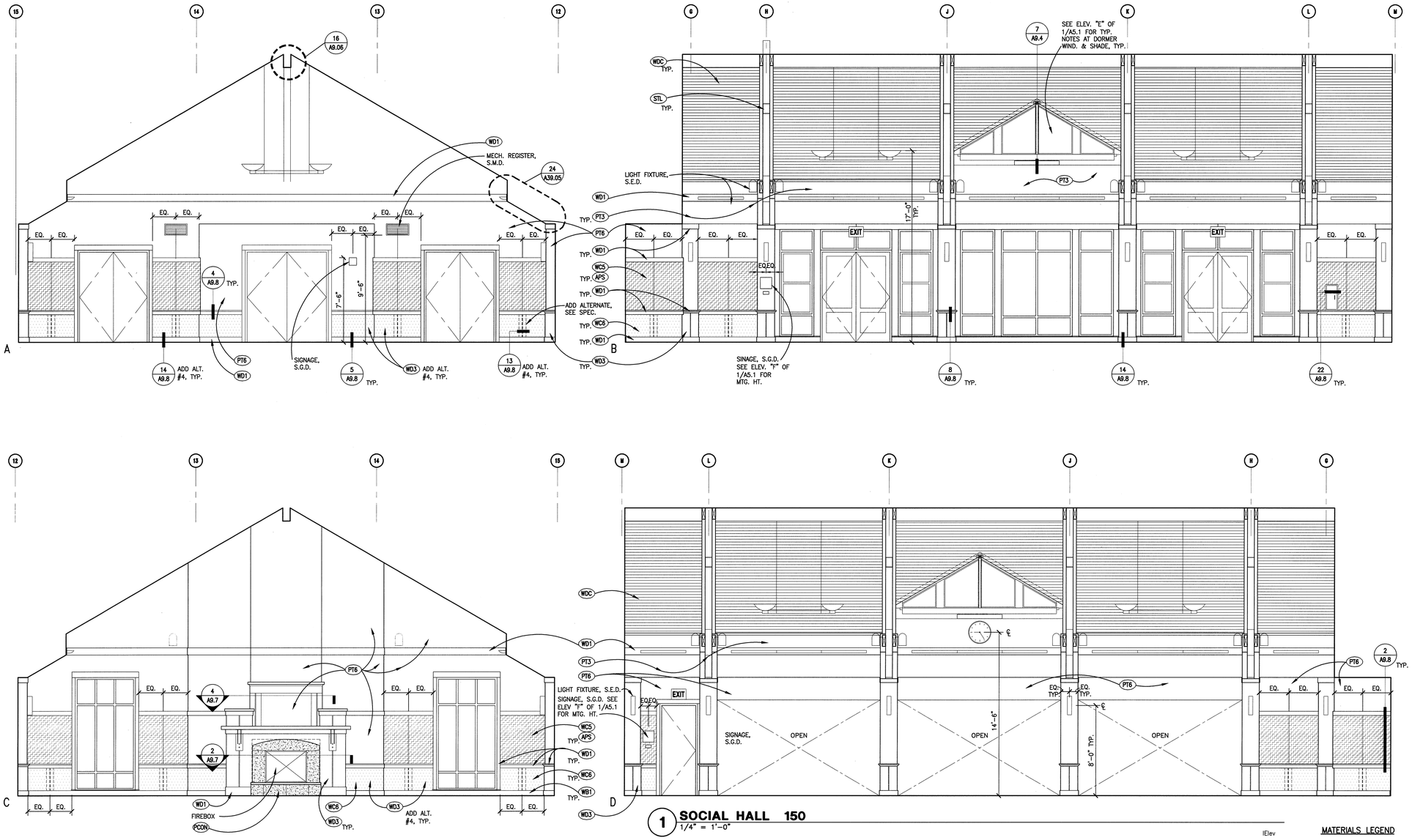

1 SOCIAL HALL 150
1/4" = 1'-0"

2 SOCIAL HALL ALCOVE 151
1/4" = 1'-0"

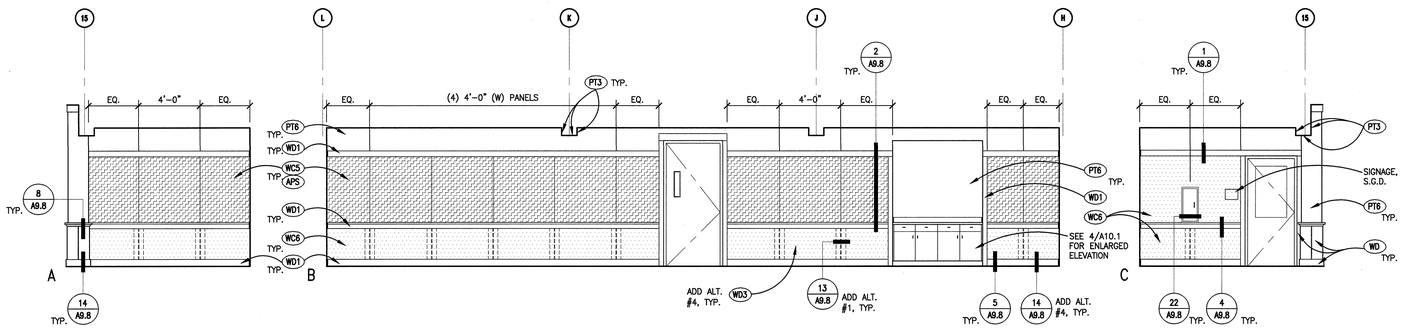

GENERAL NOTES

1. ALL DIMENSIONS IN PLAN ARE INDICATED FROM THE GRID LINE TO FACE OF STUD, UNLESS OTHERWISE NOTED.
2. ALL DIMENSIONS IN ENLARGED PLAN ARE INDICATED FROM THE GRID LINE TO FACE OF FINISH, UNLESS OTHERWISE NOTED.
3. ALL DIMENSIONS IN ELEVATION ARE FROM: FINISH FLOOR ELEVATION, FACE OF FINISH WALL OR BLOCK WALL, UNLESS OTHERWISE NOTED.
4. SEE SCHEDULES FOR HM DOOR & WINDOW COLORS
5. XXX FINISH SYMBOL – FOR FINISHES, REFER TO FINISH SCHEDULES
6. ALL SWITCHES, CONTROLS, THERMOSTATS SHALL BE INSTABLLED BETWEEN 15" & 48" FOR FORWARD REACH, BETWEEN 9" & 54" FOR SIDE REACH, A.F.F.
7. PT8 @ EXPOSED STRUCTURAL STEEL.

MATERIALS LEGEND

- AC ACOUSTICAL CEILING LAY-IN SYSTEM
- APS ACOUSTICAL PANEL SYSTEM
- CONC CONCRETE FLOOR W/ SEALER
- CPT CARPET
- CTR CORIAN COUNTER
- CT CERAMIC TILE
- FT FLOOR TILE
- FRP FIBER REINFORCED PANEL
- PCON PRECAST CONC.
- PL PLASTIC LAMINATE
- PT PAINT
- QT QUARRY TILE
- RB RUBBER BASE
- RBF RESILIENT FLOORING
- STL STEEL, PAINTED
- VCT VINYL COMPOSITE TILE
- VRB VENTED RUBBER BASE
- WC WALLCOVERING
- WD1 WOOD
- WD2 PAINTED WOOD
- WD3 VENEERED PLYWD.
- WDC WOOD SLAT CEILING W/ ACOUSTICAL BACKING
- WDF RESILIENT WOOD FLOORING

BSA ARCHITECTS
A California Corporation
501 Folsom Street, Fourth Floor
San Francisco, CA 94105
415-281-4720

LICENSED ARCHITECT
No. C26056
REN. 6-30-06
STATE OF CALIFORNIA

MOUNTAIN VIEW SENIOR CENTER

266 ESCUELA AVE
MOUNTAIN VIEW, CA

DATE: APRIL 18, 2005

REVISIONS: –

CONSTRUCTION SET

SHEET TITLE:

INTERIOR ELEVATIONS

© 2005 BSA Architects
"All drawings and written material appearing herein constitute the original and unpublished work of the architect and the same may not be duplicated, used, or disclosed without the written consent of the architect."

DRAWN BY: XL/WC
CHECKED BY: GJ
JOB NO: 0314.10

SHEET A5.6

09-17-04 A05-06.DWG

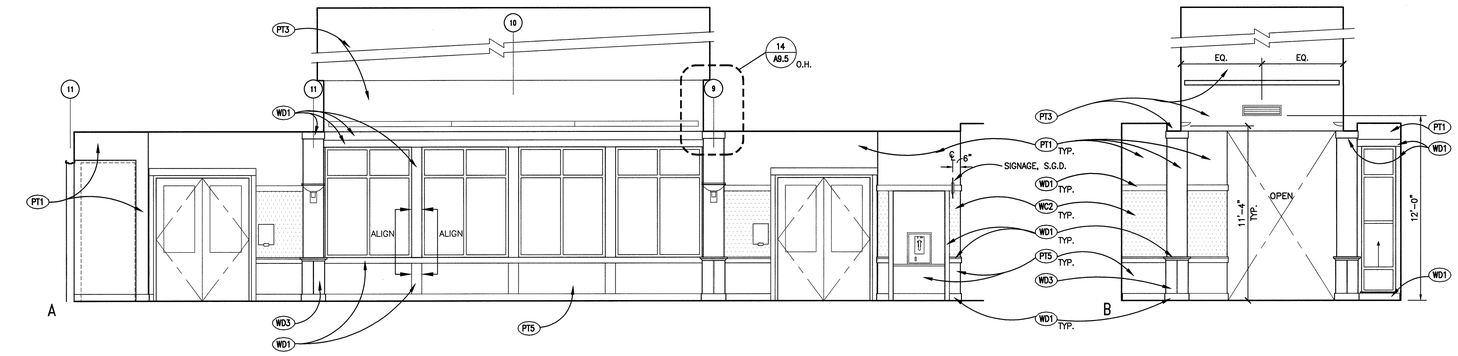

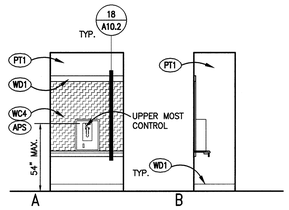

3 TELPHONE
1/4" = 1'-0"
IElev

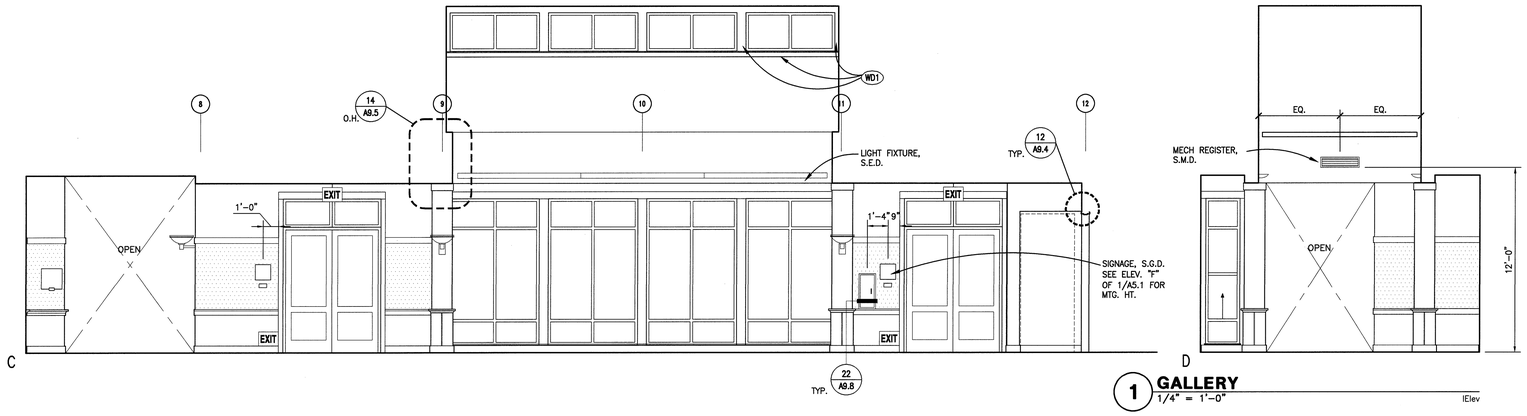

1 GALLERY
1/4" = 1'-0"
IElev

GENERAL NOTES

1. ALL DIMENSIONS IN PLAN ARE INDICATED FROM THE GRID LINE TO FACE OF STUD, UNLESS OTHERWISE NOTED.
2. ALL DIMENSIONS IN ENLARGED PLAN ARE INDICATED FROM THE GRID LINE TO FACE OF FINISH, UNLESS OTHERWISE NOTED.
3. ALL DIMENSIONS IN ELEVATION ARE FROM: FINISH FLOOR ELEVATION, FACE OF FINISH WALL OR BLOCK WALL, UNLESS OTHERWISE NOTED.
4. SEE SCHEDULES FOR HM DOOR & WINDOW COLORS
5. (XXX) FINISH SYMBOL – FOR FINISHES, REFER TO FINISH SCHEDULES
6. ALL SWITCHES, CONTROLS, THERMOSTATS SHALL BE INSTABLLED BETWEEN 15" & 48" FOR FORWARD REACH, BETWEEN 9" & 54" FOR SIDE REACH, A.F.F.
7. PT8 @ EXPOSED STRUCTURAL STEEL.

MATERIALS LEGEND

- (AC) ACOUSTICAL CEILING LAY-IN SYSTEM
- (APS) ACOUSTICAL PANEL SYSTEM
- (CONC) CONCRETE FLOOR W/ SEALER
- (CPT) CARPET
- (CTR) CORIAN COUNTER
- (CT) CERAMIC TILE
- (FT) FLOOR TILE
- (FRP) FIBER REINFORCED PANEL
- (PCON) PRECAST CONC.
- (PL) PLASTIC LAMINATE
- (PT) PAINT
- (QT) QUARRY TILE
- (RB) RUBBER BASE
- (RBF) RESILIENT FLOORING
- (STL) STEEL, PAINTED
- (VCT) VINYL COMPOSITE TILE
- (VRB) VENTED RUBBER BASE
- (WC) WALLCOVERING
- (WD1) WOOD
- (WD2) PAINTED WOOD
- (WD3) VENEERED PLYWD.
- (WDC) WOOD SLAT CEILING W/ ACOUSTICAL BACKING
- (WDF) RESILIENT WOOD FLOORING

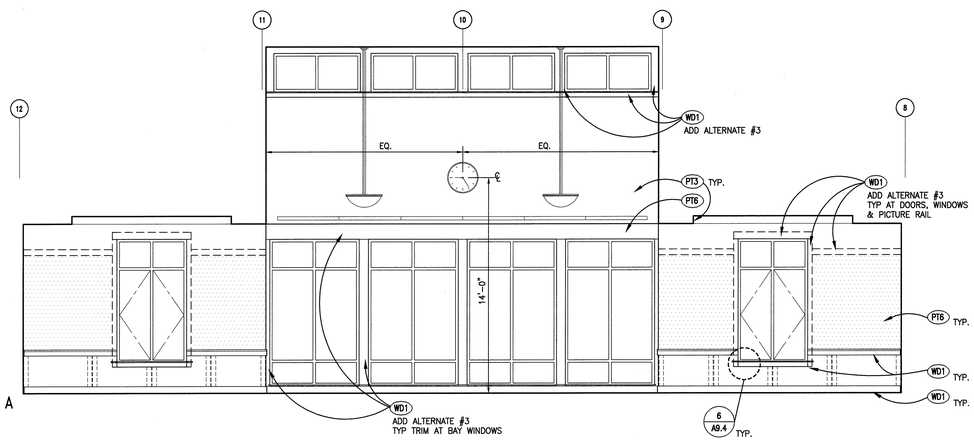

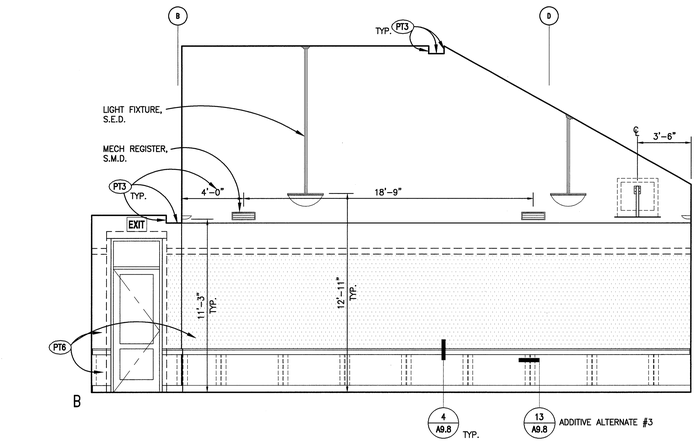

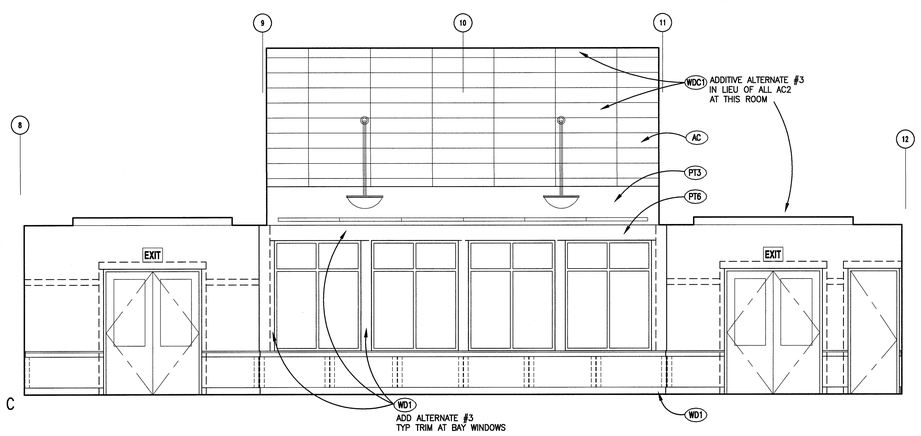

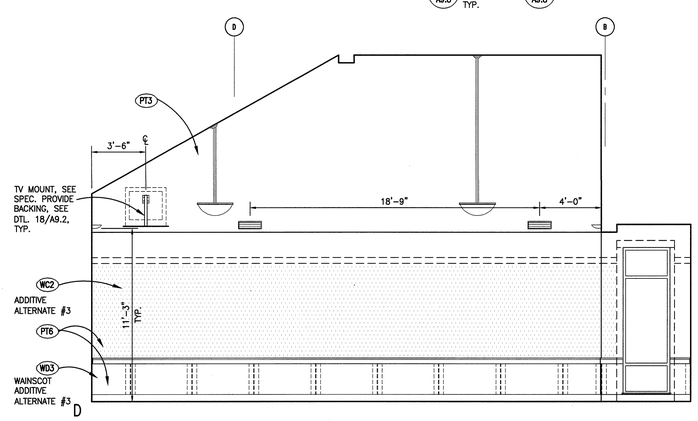

2 GAME ROOM 127
1/4" = 1'-0"
IElev

BSA ARCHITECTS
A California Corporation
501 Folsom Street, Fourth Floor
San Francisco, CA 94105
415-281-4720

LICENSED ARCHITECT
KEVIN PARKER
No. C26056
REN. 6-30-06
STATE OF CALIFORNIA

MOUNTAIN VIEW SENIOR CENTER

266 ESCUELA AVE
MOUNTAIN VIEW, CA

DATE: APRIL 18, 2005

REVISIONS: –

CONSTRUCTION SET

SHEET TITLE:

INTERIOR ELEVATIONS

© 2005 BSA Architects
"All drawings and written material appearing herein constitute the original and unpublished work of the architect and the same may not be duplicated, used, or disclosed without the written consent of the architect."

DRAWN BY: XL/WC
CHECKED BY: GJ
JOB NO: 0314.10

SHEET
A5.7

09-17-04 A05-07.DWG

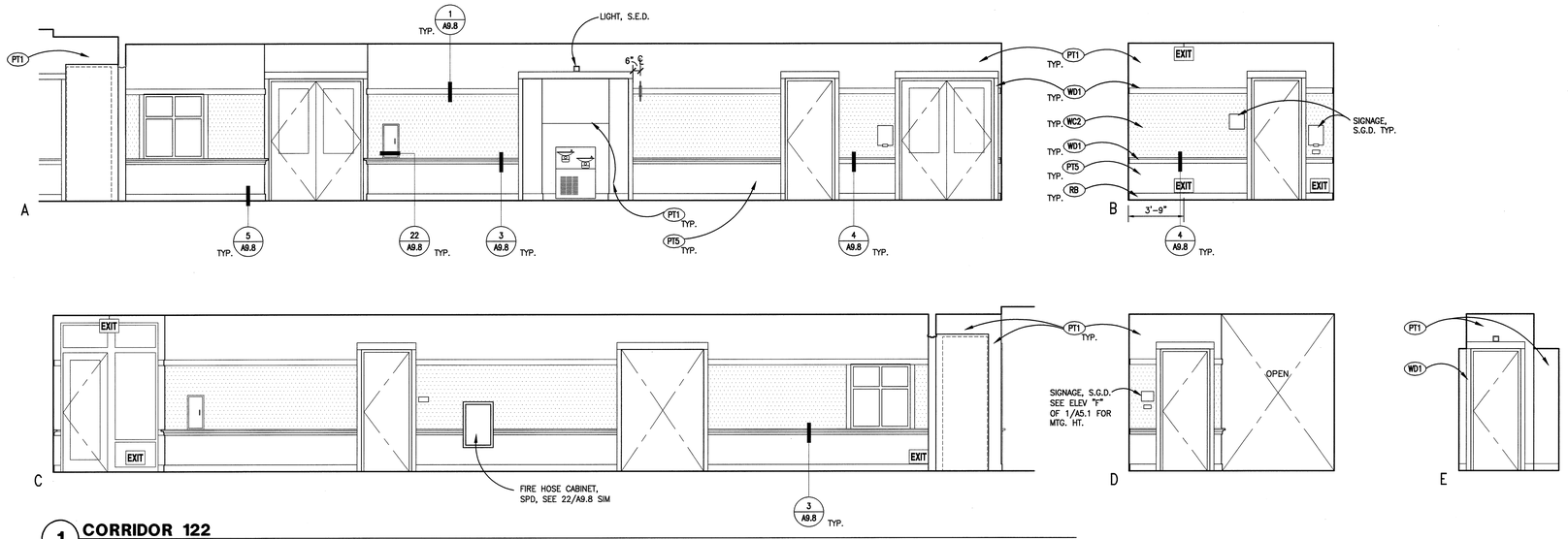

1 **CORRIDOR 122**
1/4" = 1'-0"
IElev

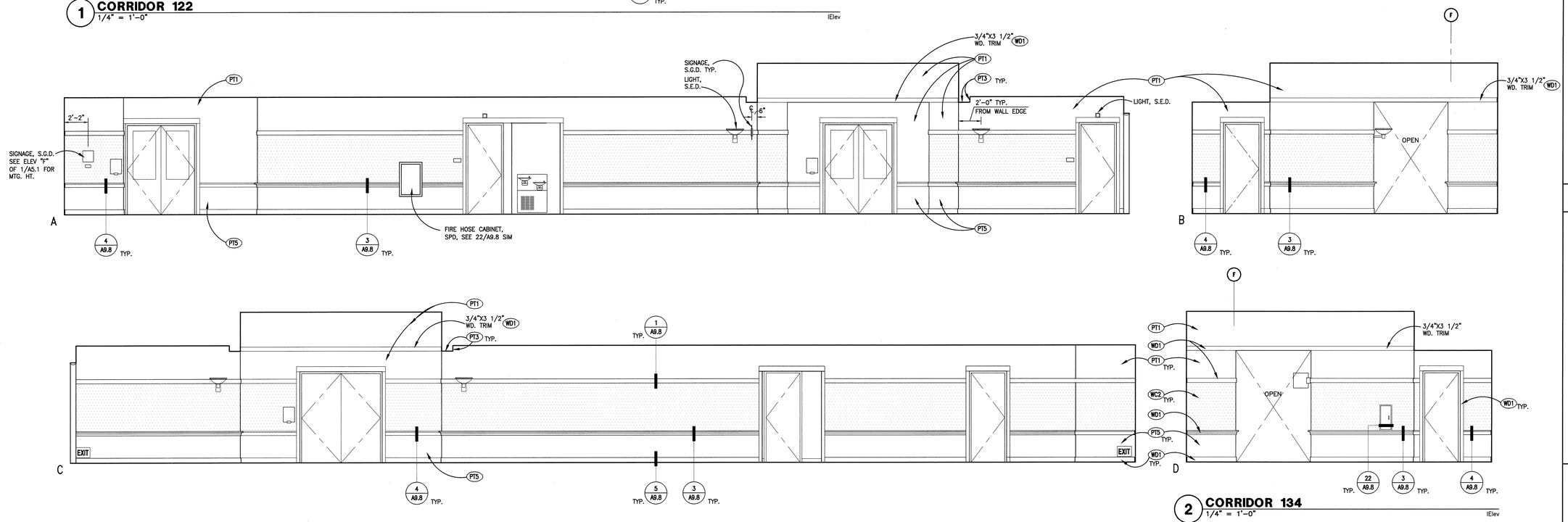

2 **CORRIDOR 134**
1/4" = 1'-0"
IElev

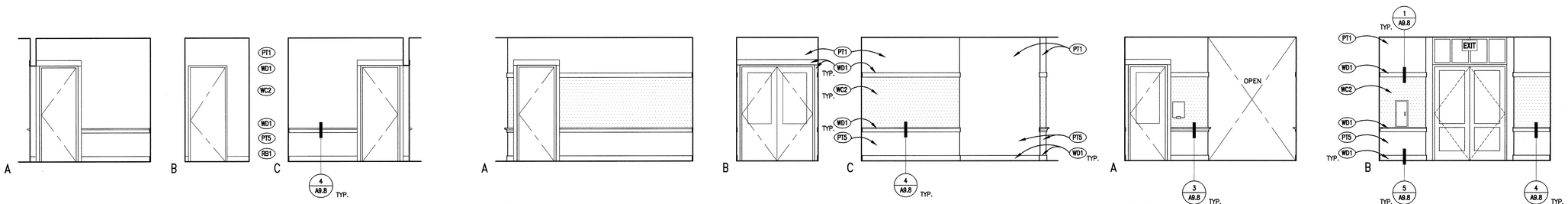

5 **CORRIDOR 122**
1/4" = 1'-0"
IElev

4 **CORRIDOR 122**
1/4" = 1'-0"
IElev

3 **CORRIDOR 134**
1/4" = 1'-0"
IElev

MATERIALS LEGEND

- AC ACOUSTICAL CEILING LAY-IN SYSTEM
- APS ACOUSTICAL PANEL SYSTEM
- CONC CONCRETE FLOOR W/ SEALER
- CPT CARPET
- CTR CORIAN COUNTER
- CT CERAMIC TILE
- FT FLOOR TILE
- FRP FIBER REINFORCED PANEL
- PCON PRECAST CONC.
- PL PLASTIC LAMINATE
- PT PAINT
- QT QUARRY TILE
- RB RUBBER BASE
- RBF RESILIENT FLOORING
- STL STEEL, PAINTED
- VCT VINYL COMPOSITE TILE
- VRB VENTED RUBBER BASE
- WC WALLCOVERING
- WD1 WOOD
- WD2 PAINTED WOOD
- WD3 VENEERED PLYWD.
- WDC WOOD SLAT CEILING W/ ACOUSTICAL BACKING
- WDF RESILIENT WOOD FLOORING

GENERAL NOTES

1. ALL DIMENSIONS IN PLAN ARE INDICATED FROM THE GRID LINE TO FACE OF STUD, UNLESS OTHERWISE NOTED.
2. ALL DIMENSIONS IN ENLARGED PLAN ARE INDICATED FROM THE GRID LINE TO FACE OF FINISH, UNLESS OTHERWISE NOTED.
3. ALL DIMENSIONS IN ELEVATION ARE FROM: FINISH FLOOR ELEVATION, FACE OF FINISH WALL OR BLOCK WALL, UNLESS OTHERWISE NOTED.
4. SEE SCHEDULES FOR HM DOOR & WINDOW COLORS
5. XXX FINISH SYMBOL – FOR FINISHES, REFER TO FINISH SCHEDULES
6. ALL SWITCHES, CONTROLS, THERMOSTATS SHALL BE INSTABLLED BETWEEN 15" & 48" FOR FORWARD REACH, BETWEEN 9" & 54" FOR SIDE REACH, A.F.F.
7. PT8 @ EXPOSED STRUCTURAL STEEL.

BSA ARCHITECTS
A California Corporation
501 Folsom Street, Fourth Floor
San Francisco, CA 94105
415-281-4720

LICENSED ARCHITECT
No. C26056
REN. 6-30-06
STATE OF CALIFORNIA

MOUNTAIN VIEW SENIOR CENTER

266 ESCUELA AVE
MOUNTAIN VIEW, CA

DATE: APRIL 18, 2005

REVISIONS: –

CONSTRUCTION SET

SHEET TITLE:

INTERIOR ELEVATIONS

© 2005 BSA Architects
"All drawings and written material appearing herein constitute the original and unpublished work of the architect and the same may not be duplicated, used, or disclosed without the written consent of the architect."

DRAWN BY: XL/WC
CHECKED BY: GJ
JOB NO: 0314.10

SHEET A5.8

09-17-04 A05-08.DWG

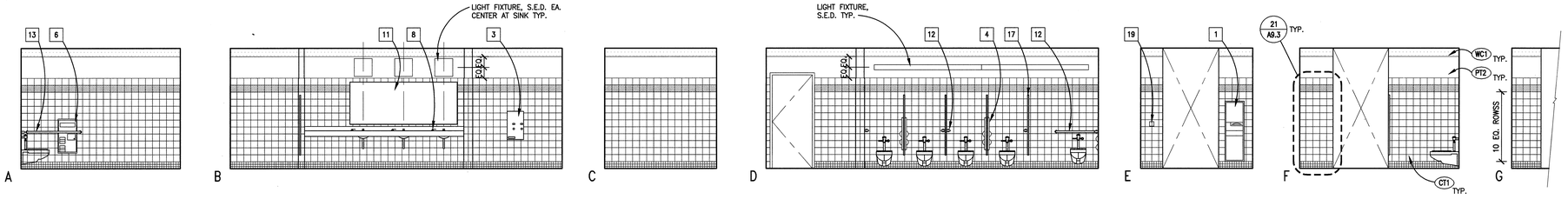

1 WOMEN TOILET RM 117
1/4" = 1'-0" IElev

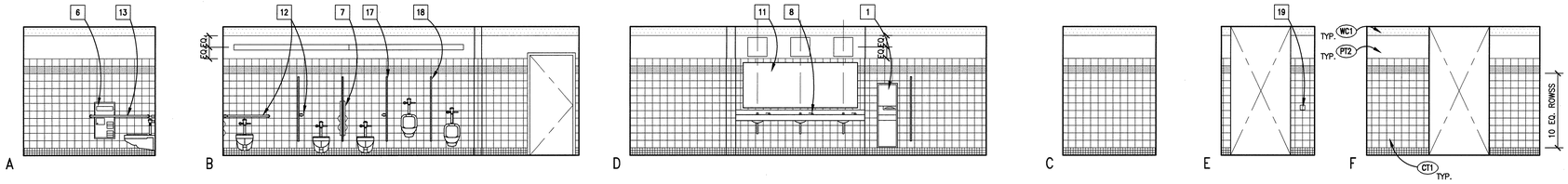

2 MEN TOILET RM 116
1/4" = 1'-0" IElev

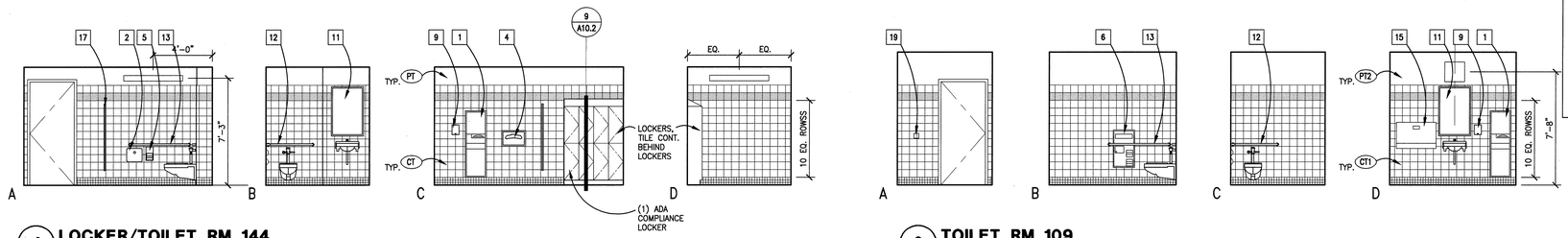

4 LOCKER/TOILET RM 144
1/4" = 1'-0" IElev

3 TOILET RM 109
1/4" = 1'-0" IElev

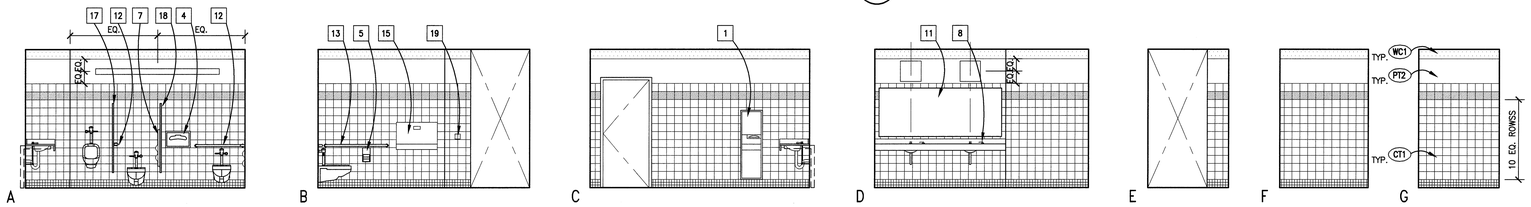

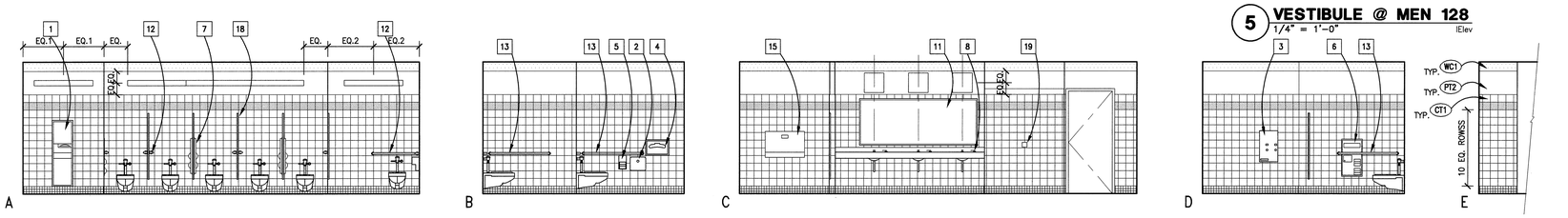

5 VESTIBULE @ MEN 128
1/4" = 1'-0" IElev

6 WOMEN 129
1/4" = 1'-0" IElev

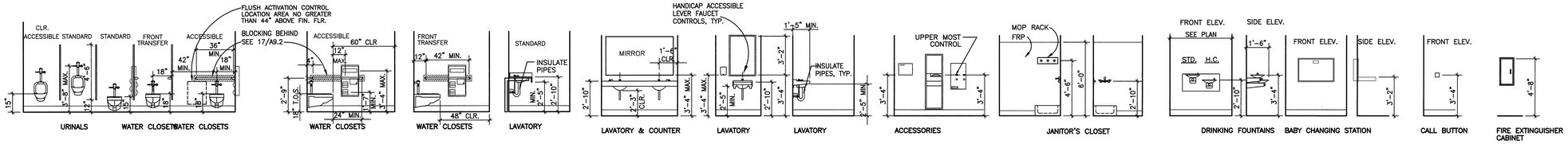

7 TOILET ACCESSORIES & MISC. ITEM MOUNTING HEIGHTS
1/4" = 1'-0" IElev

GENERAL NOTES

1. ALL DIMENSIONS IN PLAN ARE INDICATED FROM THE GRID LINE TO FACE OF STUD, UNLESS OTHERWISE NOTED.
2. ALL DIMENSIONS IN ENLARGED PLAN ARE INDICATED FROM THE GRID LINE TO FACE OF FINISH, UNLESS OTHERWISE NOTED.
3. ALL DIMENSIONS IN ELEVATION ARE FROM: FINISH FLOOR ELEVATION, FACE OF FINISH WALL OR BLOCK WALL, UNLESS OTHERWISE NOTED.
4. SEE SCHEDULES FOR HM DOOR & WINDOW COLORS
5. (XXX) FINISH SYMBOL – FOR FINISHES, REFER TO FINISH SCHEDULES
6. ALL SWITCHES, CONTROLS, THERMOSTATS SHALL BE INSTALLED BETWEEN 15" & 48" FOR FORWARD REACH, BETWEEN 9" & 54" FOR SIDE REACH, A.F.F.
7. PTB @ EXPOSED STRUCTURAL STEEL.

TOILET ACCESSORIES & MISC. ITEMS

	ITEM	MOUNTING
1	PAPER TOWEL DISPENSER AND WASTE RECEPTACLE	RECESSED
2	SANITARY NAPKIN DISPOSAL	SURFACE
3	SANITARY NAPKIN DISPENSER	SURFACE
4	TOILET SEAT COVER DISPENSER	SURFACE
5	TOILET TISSUE DISPENSER	SURFACE
6	TOILET SEAT COVER DISPENSER, SANITARY NAPKIN DISPOSAL, AND TOILET TISSUE DISPENSER	PART. MTD. OR RECESSED
7	TOILET SEAT COVER DISPENSER AND TOILET TISSUE DISPENSER	PART. MTD. OR RECESSED
8	SOAP DISPENSER	COUNTER
9	SOAP DISPENSER	SURFACE
10	24"x 36" MIRROR	SURFACE
11	72"x 36" MIRROR	SURFACE
12	36" GRAB BAR	SURFACE
13	42" GRAB BAR	SURFACE
14	SHELF & MOP HOLDER	SURFACE
15	BABY CHANGING STATION	SURFACE
16	PIPE WRAP	–
17	TOILET PARTITION	–
18	URINAL SCREEN	–
19	CALL BUTTON	SURFACE

MATERIALS LEGEND

- AC ACOUSTICAL CEILING LAY-IN SYSTEM
- APS ACOUSTICAL PANEL SYSTEM
- CONC CONCRETE FLOOR W/ SEALER
- CPT CARPET
- CTR CORIAN COUNTER
- CT CERAMIC TILE
- FT FLOOR TILE
- FRP FIBER REINFORCED PANEL
- PCON PRECAST CONC.
- PL PLASTIC LAMINATE
- PT PAINT
- QT QUARRY TILE
- RB RUBBER BASE
- RBF RESILIENT FLOORING
- STL STEEL, PAINTED
- VCT VINYL COMPOSITE TILE
- VRB VENTED RUBBER BASE
- WC WALLCOVERING
- WD1 WOOD
- WD2 PAINTED WOOD
- WD3 VENEERED PLYWD.
- WDC WOOD SLAT CEILING W/ ACOUSTICAL BACKING
- WDF RESILIENT WOOD FLOORING

BSA ARCHITECTS
A California Corporation
501 Folsom Street, Fourth Floor
San Francisco, CA 94105
415-281-4720

LICENSED ARCHITECT GARY J. JOHNSON No. C26056 REN. 8-30-05 STATE OF CALIFORNIA

MOUNTAIN VIEW SENIOR CENTER

266 ESCUELA AVE
MOUNTAIN VIEW, CA

DATE: APRIL 18, 2005

REVISIONS: –

CONSTRUCTION SET

SHEET TITLE:

INTERIOR ELEVATIONS

© 2005 BSA Architects
"All drawings and written material appearing herein constitute the original and unpublished work of the architect and the same may not be duplicated, used, or disclosed without the written consent of the architect."

DRAWN BY: XL/WC
CHECKED BY: GJ
JOB NO: 0314.10

SHEET A5.9

09-30-04 A05-09.DWG