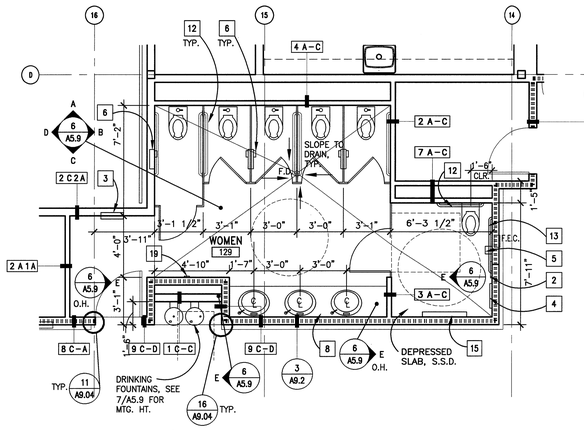

3 ENLARGED FLOOR PLAN
1/4=1'-0" PLAN

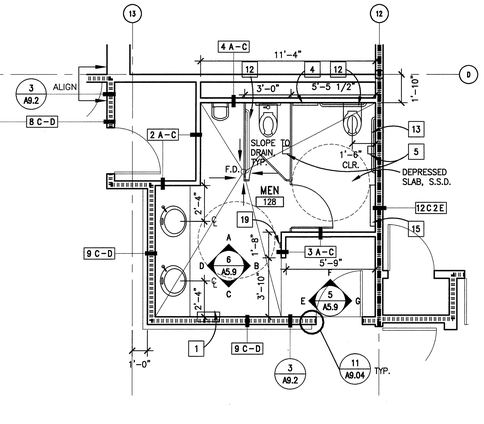

2 ENLARGED FLOOR PLAN
1/4=1'-0" PLAN

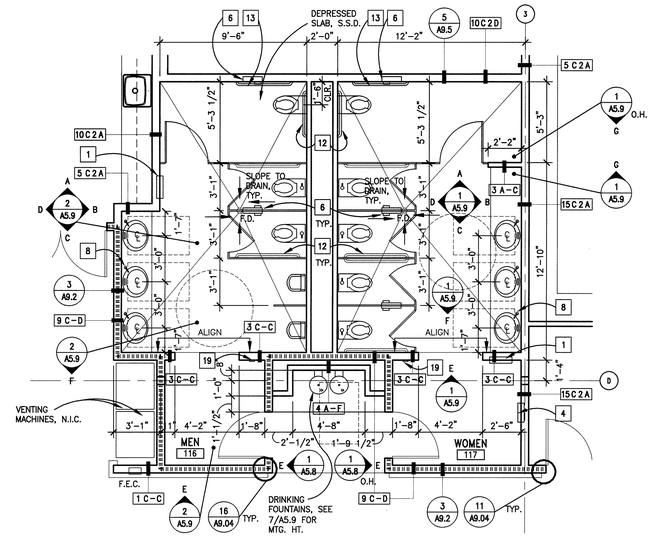

1 ENLARGED FLOOR PLAN
1/4=1'-0" PLAN

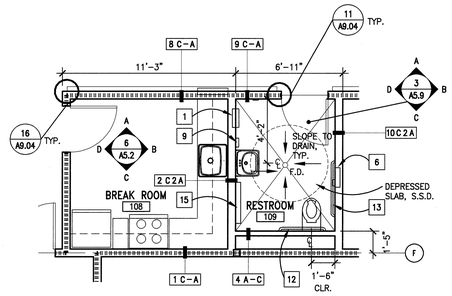

5 ENLARGED FLOOR PLAN
1/4=1'-0" PLAN

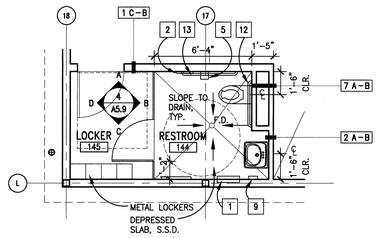

4 ENLARGED FLOOR PLAN
1/4=1'-0" PLAN

0 1' 4' 8' 12'

TRUE NORTH

PLAN NORTH

TOILET ACCESSORIES & MISC. ITEMS

	ITEM	MOUNTING
1	PAPER TOWEL DISPENSER AND WASTE RECEPTACLE	RECESSED
2	SANITARY NAPKIN DISPOSAL	SURFACE
3	SANITARY NAPKIN DISPENSER	SURFACE
4	TOILET SEAT COVER DISPENSER	SURFACE
5	TOILET TISSUE DISPENSER	SURFACE
6	TOILET SEAT COVER DISPENSER, SANITARY NAPKIN DISPOSAL, AND TOILET TISSUE DISPENSER	PART. MTD. OR RECESSED
7	TOILET SEAT COVER DISPENSER AND TOILET TISSUE DISPENSER	PART. MTD. OR RECESSED
8	SOAP DISPENSER	COUNTER
9	SOAP DISPENSER	SURFACE
10	24"x 36" MIRROR	SURFACE
11	72"x 36" MIRROR	SURFACE
12	36" GRAB BAR	SURFACE
13	42" GRAB BAR	SURFACE
14	SHELF & MOP HOLDER	SURFACE
15	BABY CHANGING STATION	SURFACE
16	PIPE WRAP	–
17	TOILET PARTITION	–
18	URINAL SCREEN	–
19	CALL BUTTON	SURFACE

MATERIALS LEGEND

- AC ACOUSTICAL CEILING LAY-IN SYSTEM
- APS ACOUSTICAL PANEL SYSTEM
- CONC CONCRETE FLOOR W/ SEALER
- CPT CARPET
- CTR CORIAN COUNTER
- CT CERAMIC TILE
- FT FLOOR TILE
- FRP FIBER REINFORCED PANEL
- PCON PRECAST CONC.
- PL PLASTIC LAMINATE
- PT PAINT
- QT QUARRY TILE
- RB RUBBER BASE
- RBF RESILIENT FLOORING
- STL STEEL, PAINTED
- VCT VINYL COMPOSITE TILE
- VRB VENTED RUBBER BASE
- WC WALLCOVERING
- WD1 WOOD
- WD2 PAINTED WOOD
- WD3 VENEERED PLYWD.
- WDC WOOD SLAT CEILING W/ ACOUSTICAL BACKING
- WDF RESILIENT WOOD FLOORING

WALL & PARTITION LEGEND

- UNIT — ROOM NAME
- 100 — ROOM NUMBER
- INTERNATIONAL SYMBOL OF ACCESSIBILITY @ DESIGNATED PARKING SPACES
- 1 A–H — PARTITION TYPES – SEE A9.1
- 100 DOOR NUMBER – SEE SCHEDULE: A11.3
- 100 WINDOW NUMBER – SEE SCHEDULE: A11.2
- 100 LOUVER NUMBER – SEE SCHEDULE: A11.4
- 100 TOILET ACCESSORY SYMBOL –SCHED. T.B.D.
- 100 EQUIPMENT SYMBOL –SCHED. T.B.D.
- CPT — FLOOR FINISH, SEE SCHEDULE A11.1, A11.2
- 1 HR CORRIDOR OR OCCUPANCY SEPARATION WALL. REFER TO A3.10, A3.11, A6.1 FOR MORE INFORMATION & DET. REFERENCES.
- 2 HOUR AREA SEPARATION WALL
- [] F.E.C. FIRE EXTINGUISHER CABINET, DIMENSIONED TO CENTERLINE.
- ○ DS ROOF DRAIN

BSA ARCHITECTS
A California Corporation
501 Folsom Street, Fourth Floor
San Francisco, CA 94105
415-281-4720

LICENSED ARCHITECT — GARY J. PEPPER No. C26056 — REN. 8-30-05 — STATE OF CALIFORNIA

MOUNTAIN VIEW SENIOR CENTER

266 ESCUELA AVE
MOUNTAIN VIEW, CA

DATE: APRIL 18, 2005

CONSTRUCTION SET

SHEET TITLE:

ENLARGED FLOOR PLANS

© 2005 BSA Architects
"All drawings and written material appearing herein constitute the original and unpublished work of the architect and the same may not be duplicated, used, or disclosed without the written consent of the architect."

DRAWN BY: HK/WC
CHECKED BY: GJ
JOB NO: 0314.10

SHEET A4.1

02-25-04 PLAN.DWG

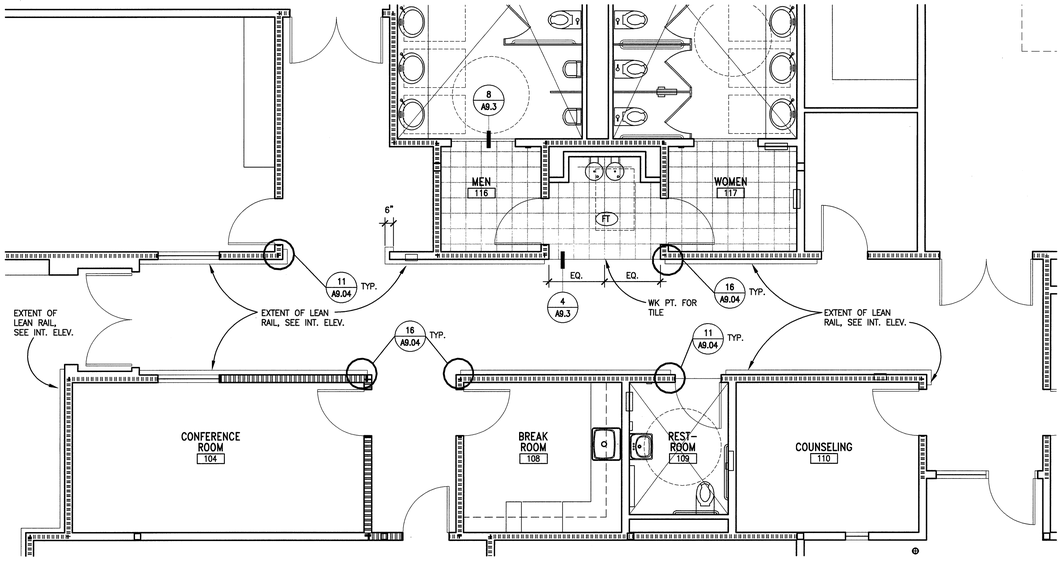

2 ENLARGED FLOOR PLAN
1/4=1'-0" PLAN

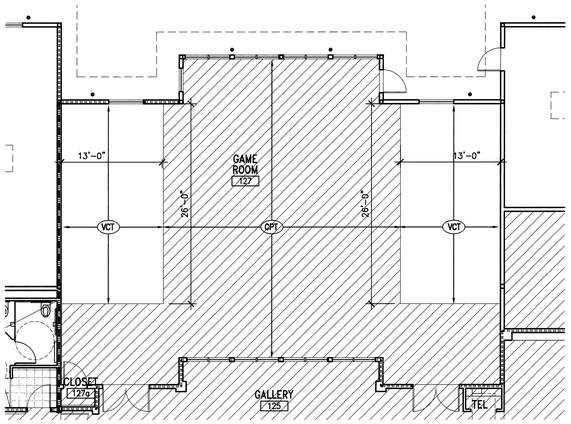

3 FINISH FLOOR PLAN
1/8=1'-0" PLAN

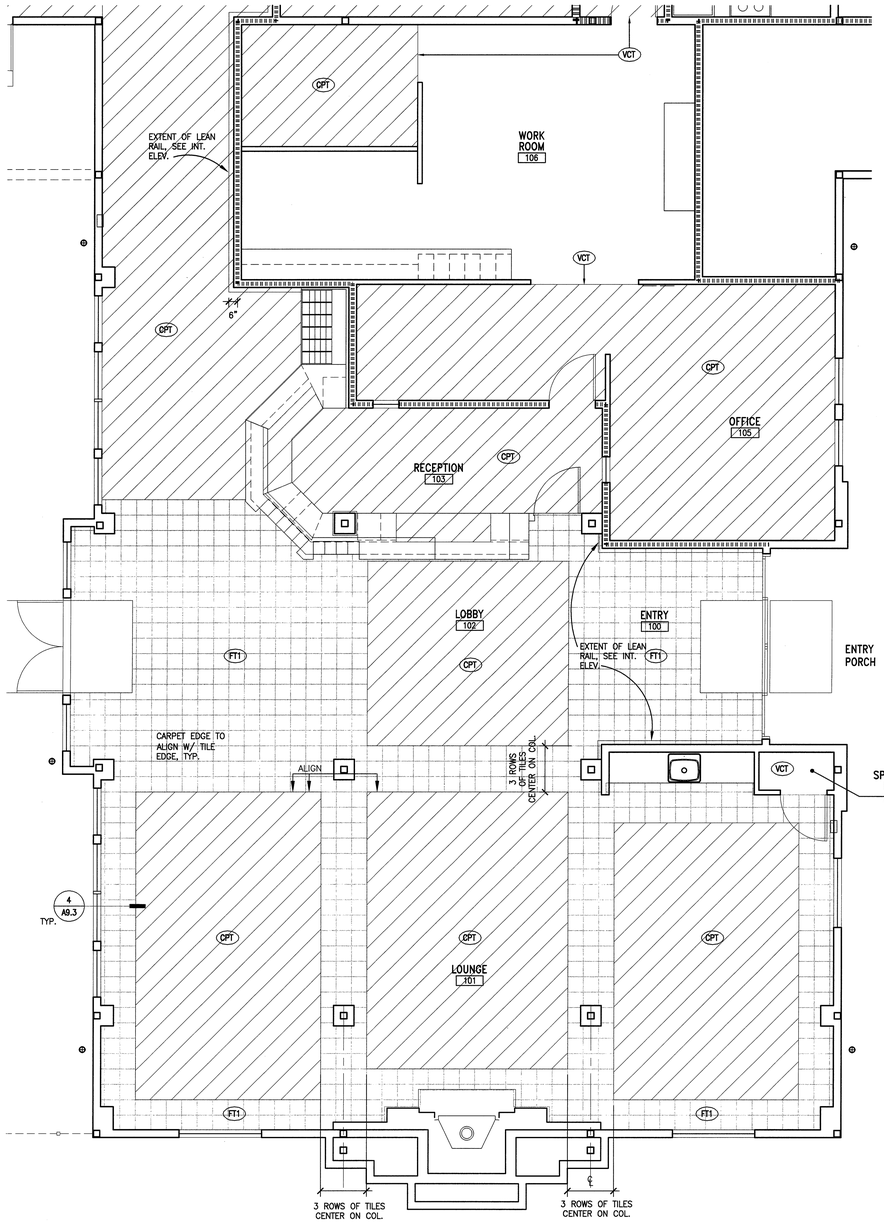

1 FINISH FLOOR PLAN
1/4=1'-0" PLAN

0 1' 4' 8' 12'

TRUE NORTH

PLAN NORTH

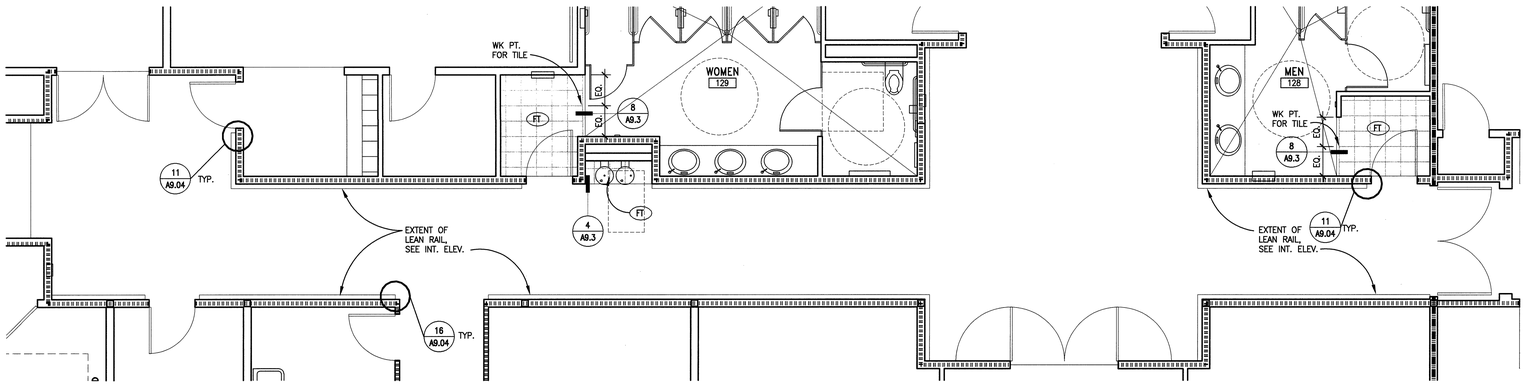

4 FINISH FLOOR PLAN
1/4=1'-0" PLAN

MATERIALS LEGEND

- AC — ACOUSTICAL CEILING LAY-IN SYSTEM
- APS — ACOUSTICAL PANEL SYSTEM
- CONC — CONCRETE FLOOR W/ SEALER
- CPT — CARPET
- CTR — CORIAN COUNTER
- CT — CERAMIC TILE
- FT — FLOOR TILE
- FRP — FIBER REINFORCED PANEL
- PCON — PRECAST CONC.
- PL — PLASTIC LAMINATE
- PT — PAINT
- QT — QUARRY TILE
- RB — RUBBER BASE
- RBF — RESILIENT FLOORING
- STL — STEEL, PAINTED
- VCT — VINYL COMPOSITE TILE
- VRB — VENTED RUBBER BASE
- WC — WALLCOVERING
- WD1 — WOOD
- WD2 — PAINTED WOOD
- WD3 — VENEERED PLYWD.
- WDC — WOOD SLAT CEILING W/ ACOUSTICAL BACKING
- WDF — RESILIENT WOOD FLOORING

WALL & PARTITION LEGEND

- UNIT / 100 — ROOM NAME / ROOM NUMBER
- INTERNATIONAL SYMBOL OF ACCESSIBILITY / DESIGNATED PARKING SPACES
- 1 A-H — PARTITION TYPES – SEE A9.1
- 100 — DOOR NUMBER – SEE SCHEDULE: A11.3
- 100 — WINDOW NUMBER – SEE SCHEDULE: A11.2
- 100 — LOUVER NUMBER – SEE SCHEDULE: A11.4
- 100 — TOILET ACCESSORY SYMBOL –SCHED. T.B.D.
- 100 — EQUIPMENT SYMBOL –SCHED. T.B.D.
- CPT — FLOOR FINISH, SEE SCHEDULE A11.1, A11.2
- 1 HR CORRIDOR OR OCCUPANCY SEPARATION WALL. REFER TO A3.10, A3.11, A6.1 FOR MORE INFORMATION & DET. REFERENCES.
- 2 HOUR AREA SEPARATION WALL
- [] F.E.C. — FIRE EXTINGUISHER CABINET, DIMENSIONED TO CENTERLINE.
- DS — ROOF DRAIN

BSA ARCHITECTS
A California Corporation
501 Folsom Street, Fourth Floor
San Francisco, CA 94105
415-281-4720

LICENSED ARCHITECT — BRIAN J. SHEEHY — No. C26056 — REN. 8-30-05 — STATE OF CALIFORNIA

MOUNTAIN VIEW SENIOR CENTER

266 ESCUELA AVE
MOUNTAIN VIEW, CA

DATE: APRIL 18, 2005

CONSTRUCTION SET

SHEET TITLE:
ENLARGED FINISH PLANS

© 2005 BSA Architects
"All drawings and written material appearing herein constitute the original and unpublished work of the architect and the same may not be duplicated, used, or disclosed without the written consent of the architect."

DRAWN BY: WC
CHECKED BY: GJ
JOB NO: 0314.10

SHEET A4.2

02-25-04 PLAN.DWG