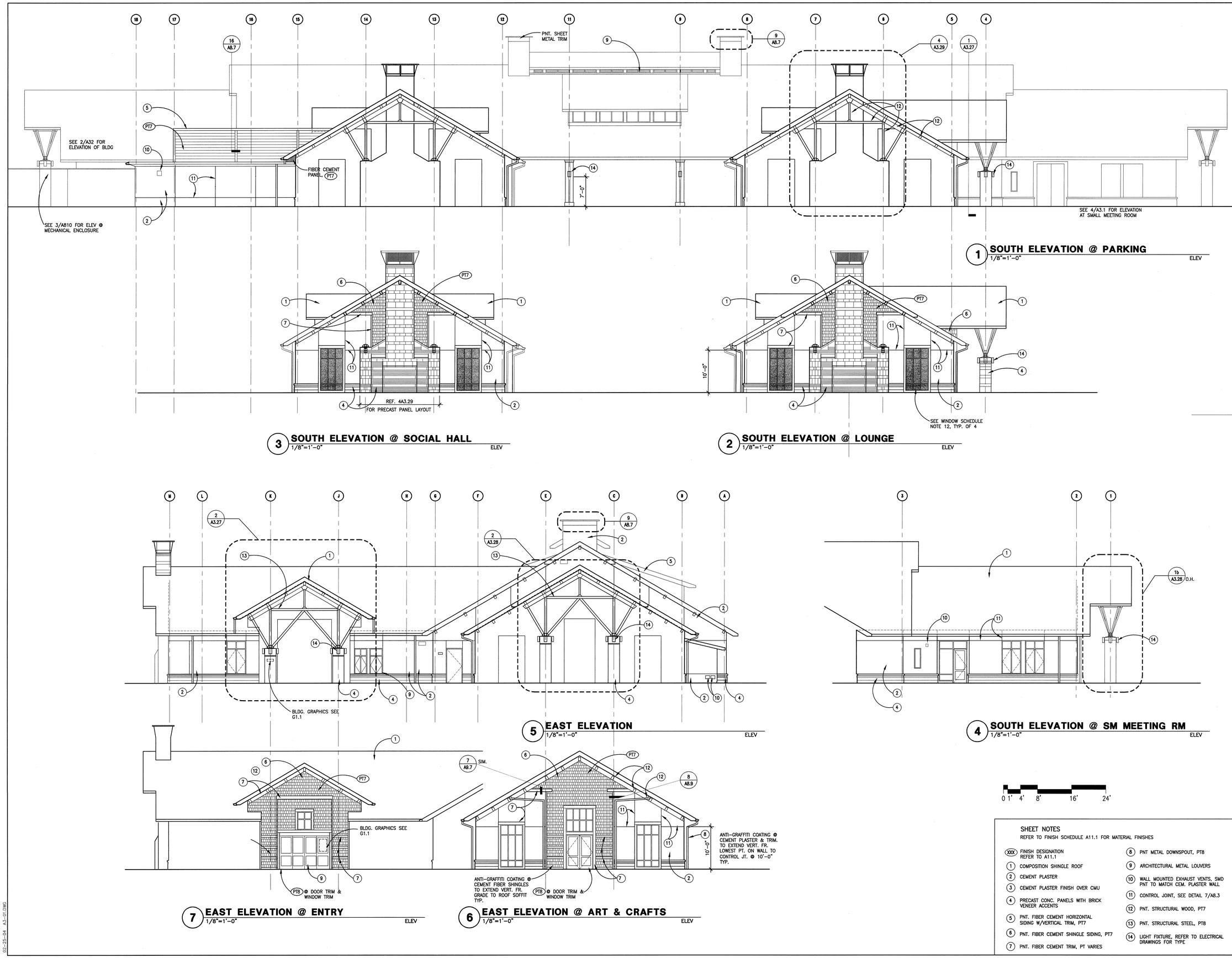


1 SOUTH ELEVATION @ PARKING
1/8"=1'-0" ELEV

2 SOUTH ELEVATION @ LOUNGE
1/8"=1'-0" ELEV

3 SOUTH ELEVATION @ SOCIAL HALL
1/8"=1'-0" ELEV

4 SOUTH ELEVATION @ SM MEETING RM
1/8"=1'-0" ELEV

5 EAST ELEVATION
1/8"=1'-0" ELEV

6 EAST ELEVATION @ ART & CRAFTS
1/8"=1'-0" ELEV

7 EAST ELEVATION @ ENTRY
1/8"=1'-0" ELEV

0 1' 4' 8' 16' 24'

## SHEET NOTES

REFER TO FINISH SCHEDULE A11.1 FOR MATERIAL FINISHES

- XXX FINISH DESIGNATION REFER TO A11.1
- 1 COMPOSITION SHINGLE ROOF
- 2 CEMENT PLASTER
- 3 CEMENT PLASTER FINISH OVER CMU
- 4 PRECAST CONC. PANELS WITH BRICK VENEER ACCENTS
- 5 PNT. FIBER CEMENT HORIZONTAL SIDING W/VERTICAL TRIM, PT7
- 6 PNT. FIBER CEMENT SHINGLE SIDING, PT7
- 7 PNT. FIBER CEMENT TRIM, PT VARIES
- 8 PNT METAL DOWNSPOUT, PT8
- 9 ARCHITECTURAL METAL LOUVERS
- 10 WALL MOUNTED EXHAUST VENTS, SMD PNT TO MATCH CEM. PLASTER WALL
- 11 CONTROL JOINT, SEE DETAIL 7/A8.3
- 12 PNT. STRUCTURAL WOOD, PT7
- 13 PNT. STRUCTURAL STEEL, PT8
- 14 LIGHT FIXTURE, REFER TO ELECTRICAL DRAWINGS FOR TYPE


BSA ARCHITECTS
A California Corporation
501 Folsom Street, Fourth Floor
San Francisco, CA 94105
415-281-4720


LICENSED ARCHITECT DAVID BARSS No. C26056 REN. 6-30-06 STATE OF CALIFORNIA

# MOUNTAIN VIEW SENIOR CENTER

266 ESCUELA AVE
MOUNTAIN VIEW, CA

DATE: APRIL 18, 2005

REVISIONS:

CONSTRUCTION SET

SHEET TITLE:

EXTERIOR ELEVATIONS


© 2005 BSA Architects
"All drawings and written material appearing herein constitute the original and unpublished work of the architect and the same may not be duplicated, used, or disclosed without the written consent of the architect."


DRAWN BY: HK
CHECKED BY: GJ
JOB NO: 0314.10

SHEET A3.1

02-25-04 A3-01.DWG

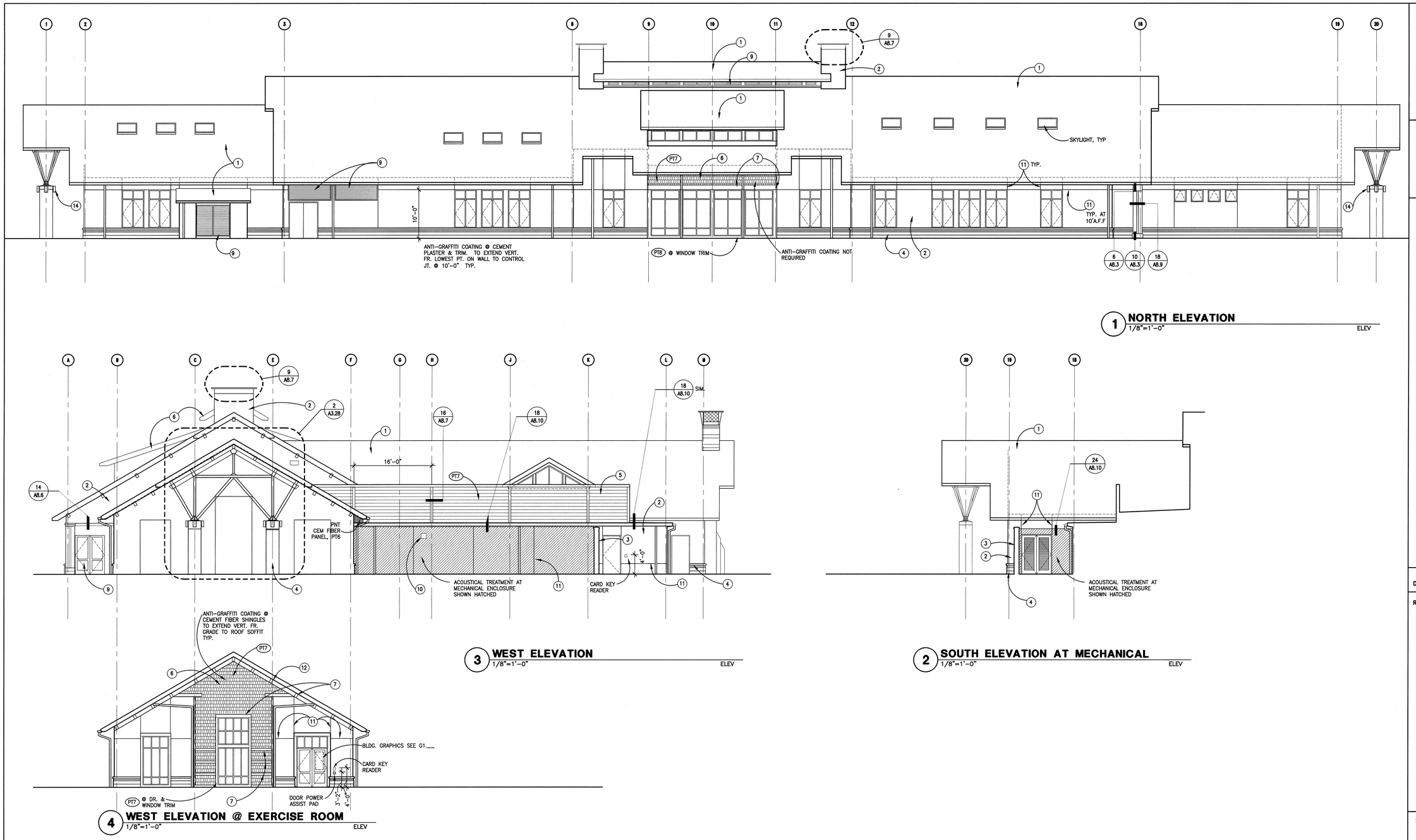


1 NORTH ELEVATION
1/8"=1'-0" ELEV



3 WEST ELEVATION
1/8"=1'-0" ELEV



2 SOUTH ELEVATION AT MECHANICAL
1/8"=1'-0" ELEV



4 WEST ELEVATION @ EXERCISE ROOM
1/8"=1'-0" ELEV

0 1' 4' 8' 16' 24'

SHEET NOTES
REFER TO FINISH SCHEDULE A11.1 FOR MATERIAL FINISHES

- XXX FINISH DESIGNATION REFER TO A11.1
- 1 COMPOSITION SHINGLE ROOF
- 2 CEMENT PLASTER
- 3 CEMENT PLASTER FINISH OVER CMU
- 4 PRECAST CONC. PANELS WITH BRICK VENEER ACCENTS
- 5 PNT. FIBER CEMENT HORIZONTAL SIDING W/VERTICAL TRIM, PT7
- 6 PNT. FIBER CEMENT SHINGLE SIDING, PT7
- 7 PNT. FIBER CEMENT TRIM, PT VARIES
- 8 PNT METAL DOWNSPOUT, PT8
- 9 ARCHITECTURAL METAL LOUVERS
- 10 WALL MOUNTED EXHAUST VENTS, SMD PNT TO MATCH CEM. PLASTER WALL
- 11 CONTROL JOINT, SEE DETAIL 7/A8.3
- 12 PNT. STRUCTURAL WOOD, PT7
- 13 PNT. STRUCTURAL STEEL, PT8
- 14 LIGHT FIXTURE, REFER TO ELECTRICAL DRAWINGS FOR TYPE


BSA ARCHITECTS
A California Corporation
501 Folsom Street, Fourth Floor
San Francisco, CA 94105
415-281-4720


LICENSED ARCHITECT
No. C26056
REN. 6-30-05
STATE OF CALIFORNIA

# MOUNTAIN VIEW SENIOR CENTER

266 ESCUELA AVE
MOUNTAIN VIEW, CA

DATE: APRIL 18, 2005

REVISIONS:

CONSTRUCTION SET

SHEET TITLE:

EXTERIOR ELEVATIONS


© 2005 BSA Architects
"All drawings and written material appearing herein constitute the original and unpublished work of the architect and the same may not be duplicated, used, or disclosed without the written consent of the architect."


DRAWN BY: HK
CHECKED BY: GJ
JOB NO: 0314.10

SHEET A3.2

02-25-04 A3-01.DWG

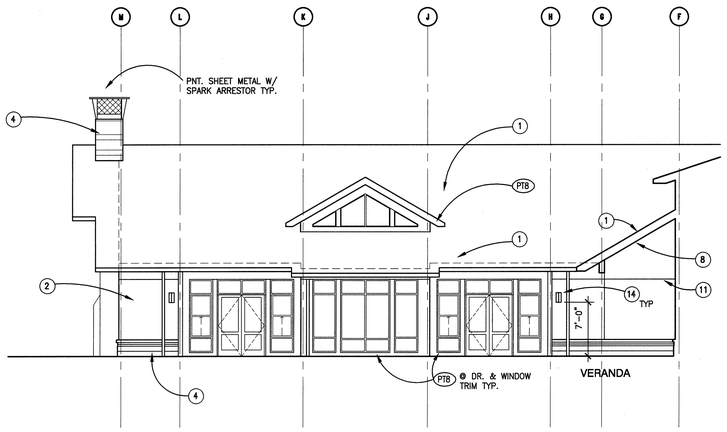


3 **WEST ELEVATION @ PATIO**
1/8"=1'-0" ELEV

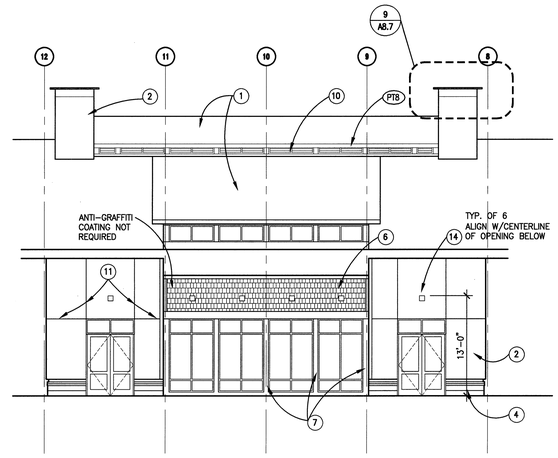


2 **SOUTH ELEVATION @ PATIO**
1/8"=1'-0" ELEV

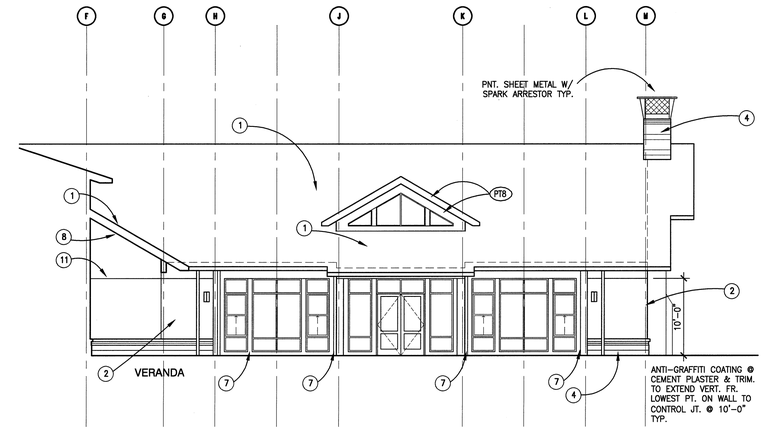


1 **EAST ELEVATION @ PATIO**
1/8"=1'-0" ELEV

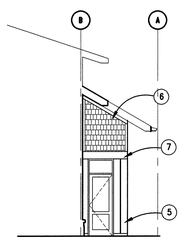

7 **WEST ELEVATION-GAME ROOM**
1/8"=1'-0" ELEV

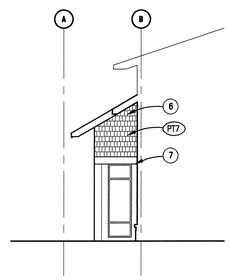


6 **EAST ELEVATION-GAME ROOM**
1/8"=1'-0" ELEV

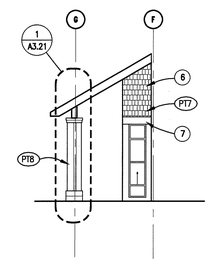


5 **WEST ELEVATION @ GALLERY**
1/8"=1'-0" ELEV

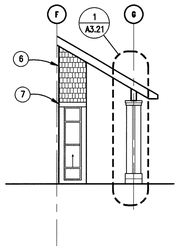


4 **EAST ELEVATION @ GALLERY**
1/8"=1'-0" ELEV

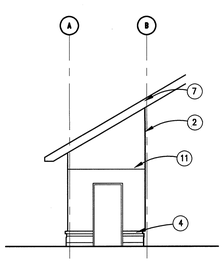

11 **ELEVATION @ MULTIPURPOSE B**
1/8"=1'-0"

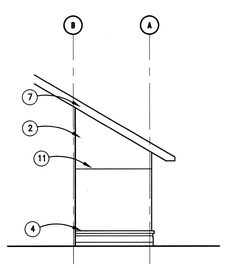

10 **ELEVATION @ MULTIPURPOSE A**
1/8"=1'-0"

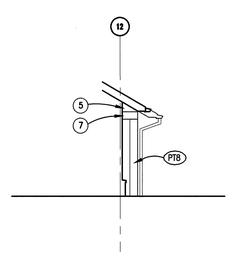


9 **NORTH ELEVATION @ SOCIAL HALL/LOBBY**
1/8"=1'-0"

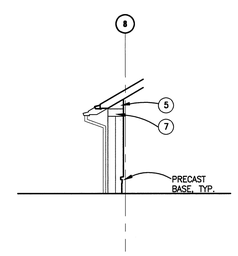


8 **NORTH ELEVATION @ LOBBY & SOCIAL HALL**
1/8"=1'-0"

SHEET NOTES
REFER TO FINISH SCHEDULE A11.1 FOR MATERIAL FINISHES

- XXX FINISH DESIGNATION REFER TO A11.1
- 1 COMPOSITION SHINGLE ROOF
- 2 CEMENT PLASTER
- 3 CEMENT PLASTER FINISH OVER CMU
- 4 PRECAST CONC. PANELS WITH BRICK VENEER ACCENTS
- 5 PNT. FIBER CEMENT HORIZONTAL SIDING W/VERTICAL TRIM, PT7
- 6 PNT. FIBER CEMENT SHINGLE SIDING, PT7
- 7 PNT. FIBER CEMENT TRIM, PT VARIES
- 8 PNT METAL DOWNSPOUT, PT8
- 9 ARCHITECTURAL METAL LOUVERS
- 10 WALL MOUNTED EXHAUST VENTS, SMD PNT TO MATCH CEM. PLASTER WALL
- 11 CONTROL JOINT, SEE DETAIL 7/A8.3
- 12 PNT. STRUCTURAL WOOD, PT7
- 13 PNT. STRUCTURAL STEEL, PT8
- 14 LIGHT FIXTURE, REFER TO ELECTRICAL DRAWINGS FOR TYPE

BSA ARCHITECTS
A California Corporation
501 Folsom Street, Fourth Floor
San Francisco, CA 94105
415-281-4720

LICENSED ARCHITECT DAVID D. ROSS No. C26056 REN. 6-30-05 STATE OF CALIFORNIA

# MOUNTAIN VIEW SENIOR CENTER

266 ESCUELA AVE
MOUNTAIN VIEW, CA

DATE: APRIL 18, 2005

REVISIONS:

CONSTRUCTION SET

SHEET TITLE:
EXTERIOR ELEVATIONS

© 2005 BSA Architects
"All drawings and written material appearing herein constitute the original and unpublished work of the architect and the same may not be duplicated, used, or disclosed without the written consent of the architect."

DRAWN BY: HK
CHECKED BY: GJ
JOB NO: 0314.10

SHEET A3.3

02-25-04 A3-01.DWG

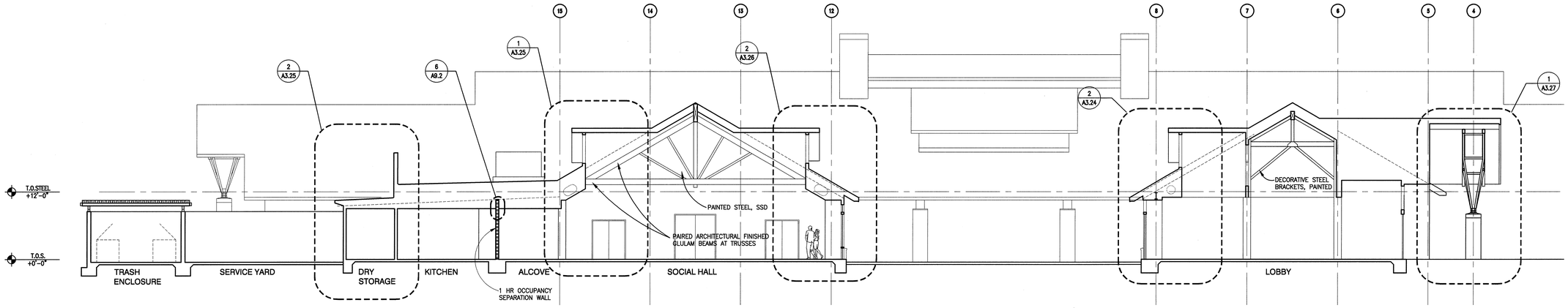


1 BUILDING SECTION
1/8"=1'-0"
BLDGSEC

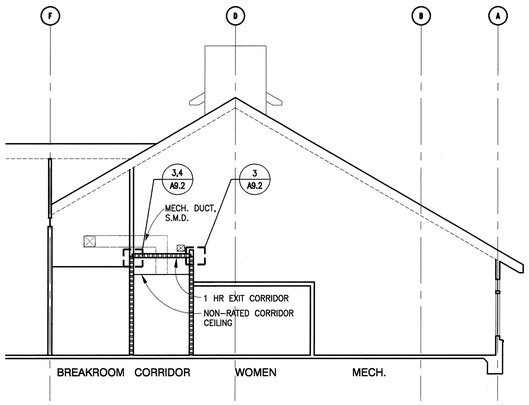


3 BUILDING SECTION
1/8"=1'-0"
BLDGSEC

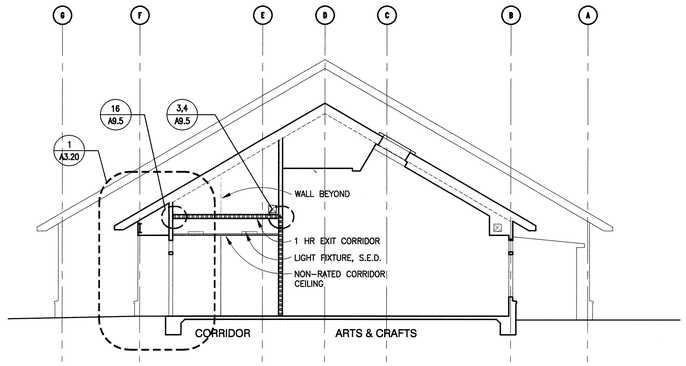


2 BUILDING SECTION
1/8"=1'-0"
BLDGSEC

0 1' 4' 8' 16' 24'


BSA ARCHITECTS
A California Corporation
501 Folsom Street, Fourth Floor
San Francisco, CA 94105
415-281-4720


LICENSED ARCHITECT
TOWNO D. ROSS
No. C26056
REN. 6-30-05
STATE OF CALIFORNIA

# MOUNTAIN VIEW SENIOR CENTER

266 ESCUELA AVE
MOUNTAIN VIEW, CA

DATE: APRIL 18, 2005

REVISIONS:

CONSTRUCTION SET

SHEET TITLE:

BUILDING SECTIONS


© 2005 BSA Architects
"All drawings and written material appearing herein constitute the original and unpublished work of the architect and the same may not be duplicated, used, or disclosed without the written consent of the architect."


DRAWN BY: HK/WC
CHECKED BY: GJ
JOB NO: 0314.10

SHEET A3.10

03-08-04 A3-10.DWG

## WALL & PARTITION LEGEND

1 HR CORRIDOR OR OCCUPANCY SEPARATION WALL. REFER TO A3.10, A3.11, A6.1 FOR MORE INFORMATION & DET. REFERENCES.

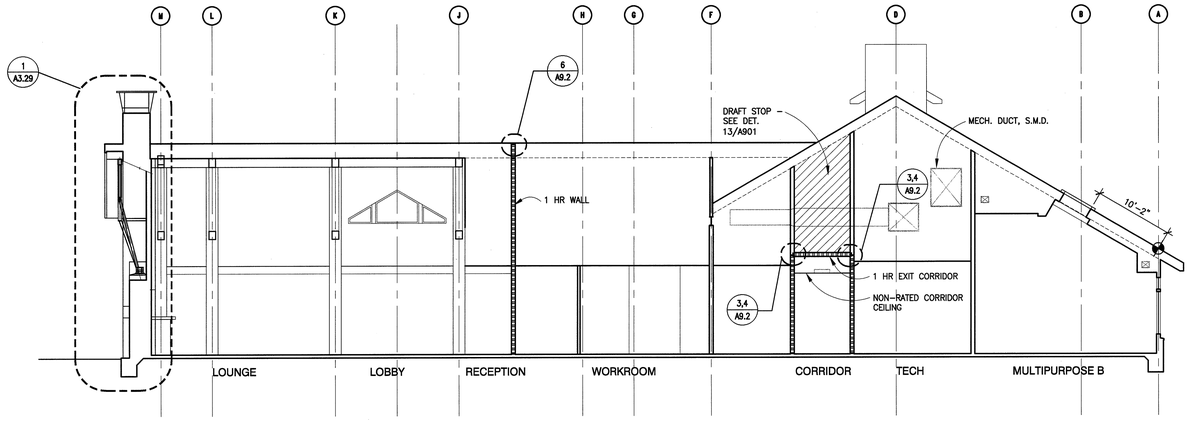


**2 BUILDING SECTION**
1/8"=1'-0"
BLDGSEC

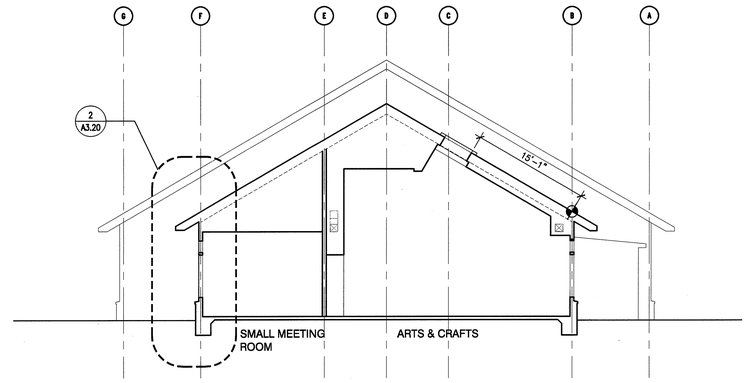


**1 BUILDING SECTION**
1/8"=1'-0"
BLDGSEC

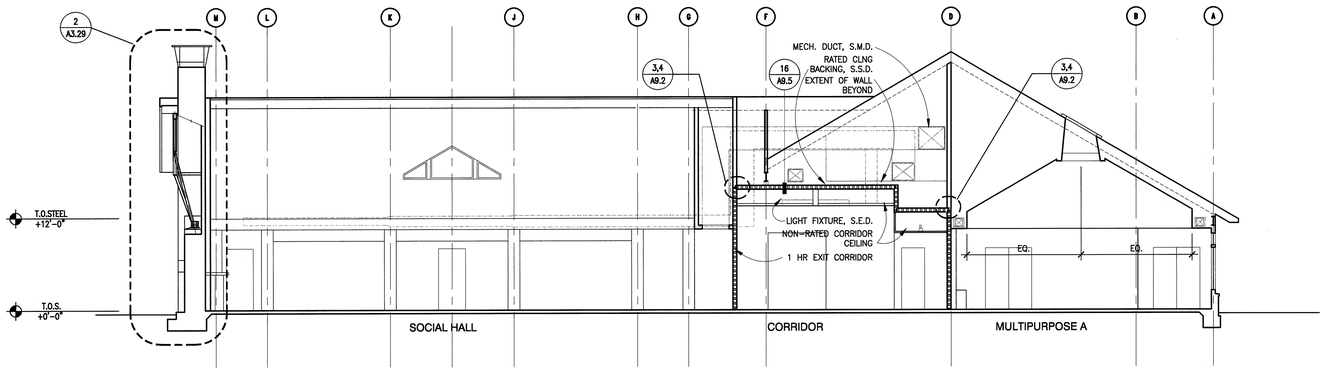


**4 BUILDING SECTION**
1/8"=1'-0"
BLDGSEC

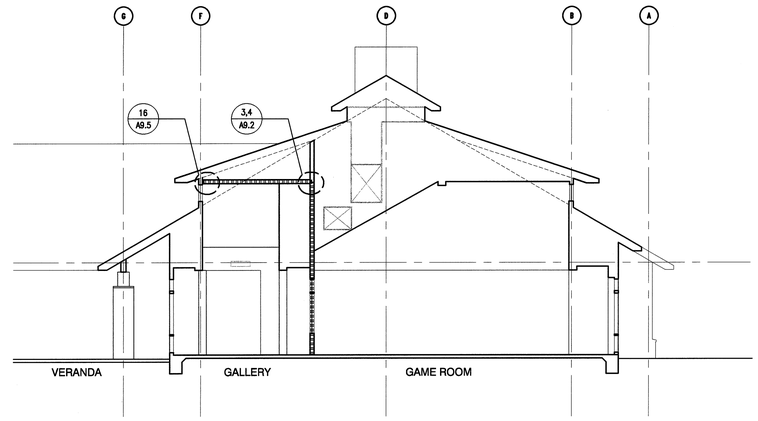


REFERENCE 1/A3.21 FOR LARGE SCALE SECTION

**3 BUILDING SECTION**
1/8"=1'-0"
BLDGSEC

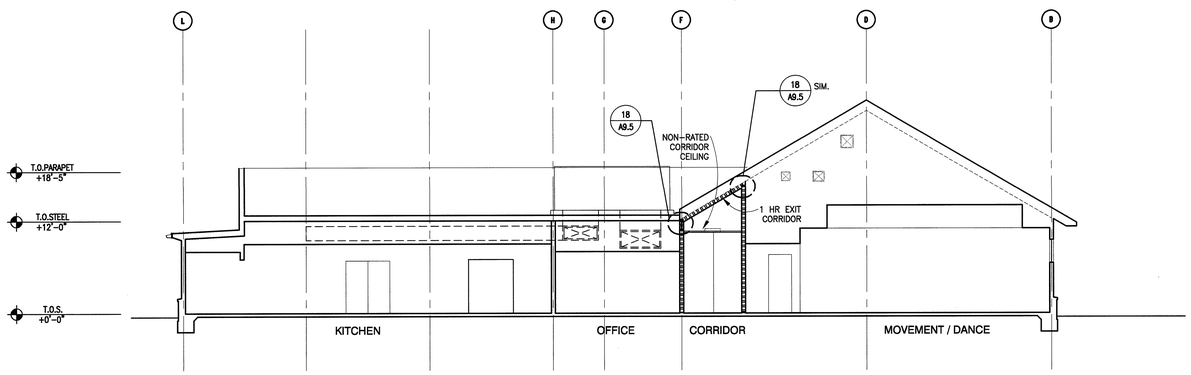


**5 BUILDING SECTION**
1/8"=1'-0"
BLDGSEC

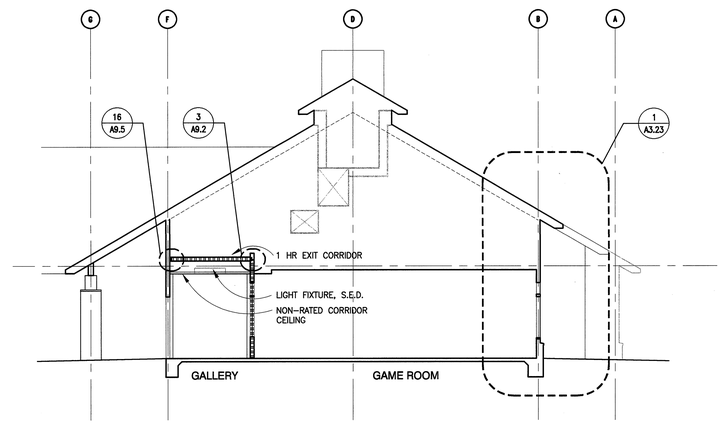


**6 BUILDING SECTION**
1/8"=1'-0"
BLDGSEC

0 1' 4' 8' 16' 24'


BSA ARCHITECTS
A California Corporation
501 Folsom Street, Fourth Floor
San Francisco, CA 94105
415-281-4720


LICENSED ARCHITECT No. C26056 REN. 6-30-06 STATE OF CALIFORNIA

# MOUNTAIN VIEW SENIOR CENTER

266 ESCUELA AVE
MOUNTAIN VIEW, CA

DATE: APRIL 18, 2005

REVISIONS:

CONSTRUCTION SET

SHEET TITLE:

## BUILDING SECTIONS


© 2005 BSA Architects
"All drawings and written material appearing herein constitute the original and unpublished work of the architect and the same may not be duplicated, used, or disclosed without the written consent of the architect."


DRAWN BY: HK/WC
CHECKED BY: GJ
JOB NO: 0314.10

SHEET A3.11

03-08-04 A3-11.DWG

WALL SECTION SHEET NOTES: SEE SHEET A3.20

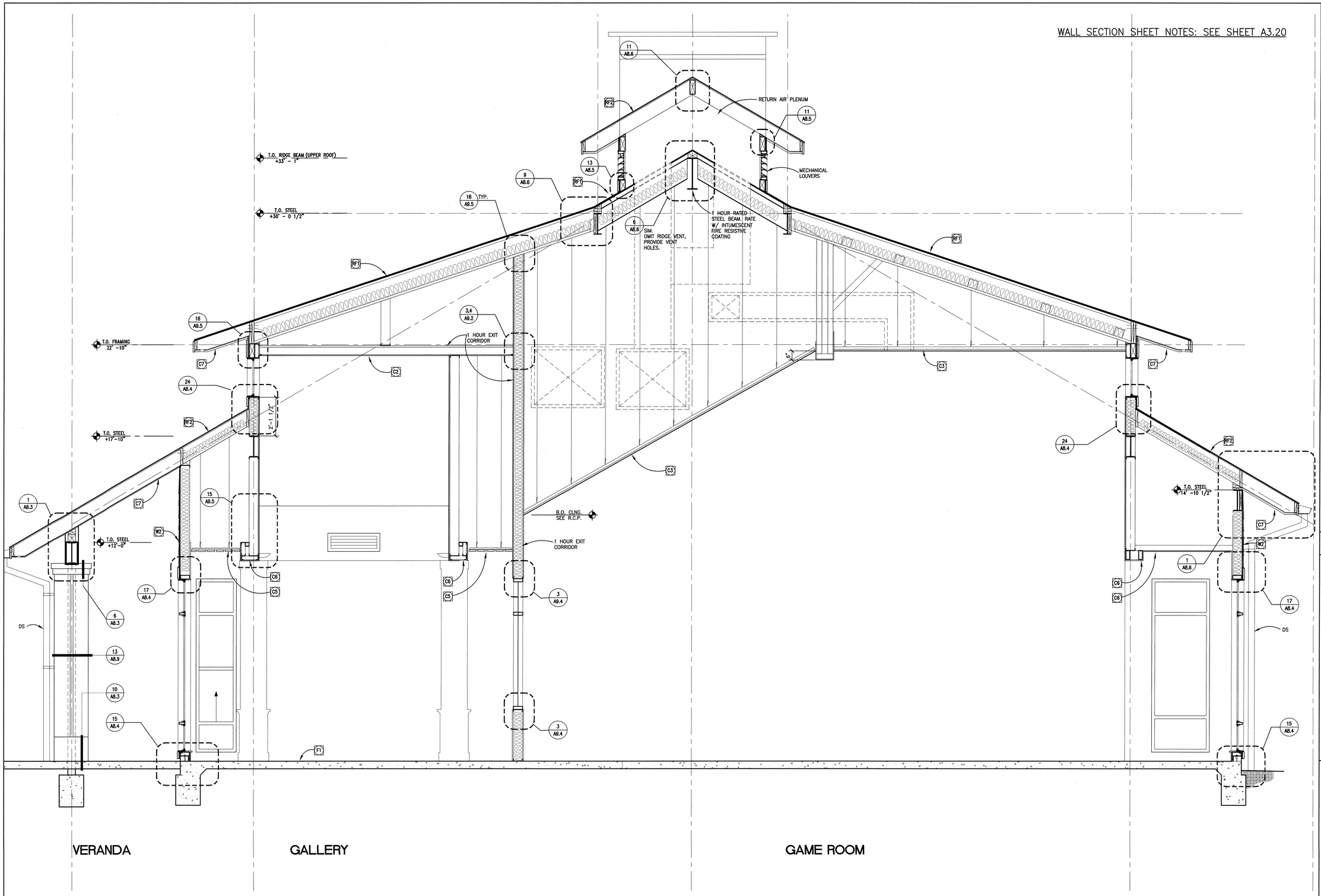


1 **WALL SECTION @ SOCIAL HALL, LOUNGE SIM.**
1/2"=1'-0"
WALSEC1

0 1' 2' 5' 10'

03/18/04 A3-21

BSA ARCHITECTS
A California Corporation
501 Folsom Street, Fourth Floor
San Francisco, CA 94105
415-281-4720

LICENSED ARCHITECT
No. C26056
REN. 8-30-05
STATE OF CALIFORNIA

# MOUNTAIN VIEW SENIOR CENTER

266 ESCUELA AVE
MOUNTAIN VIEW, CA

DATE: APRIL 18, 2005

REVISIONS:

CONSTRUCTION SET

SHEET TITLE:

WALL SECTIONS

© 2005 BSA Architects
"All drawings and written material appearing herein constitute the original and unpublished work of the architect and the same may not be duplicated, used, or disclosed without the written consent of the architect."

DRAWN BY:
CHECKED BY: GJ
JOB NO: 314.10

SHEET
A3.21

WALL SECTION SHEET NOTES: SEE SHEET A3.20

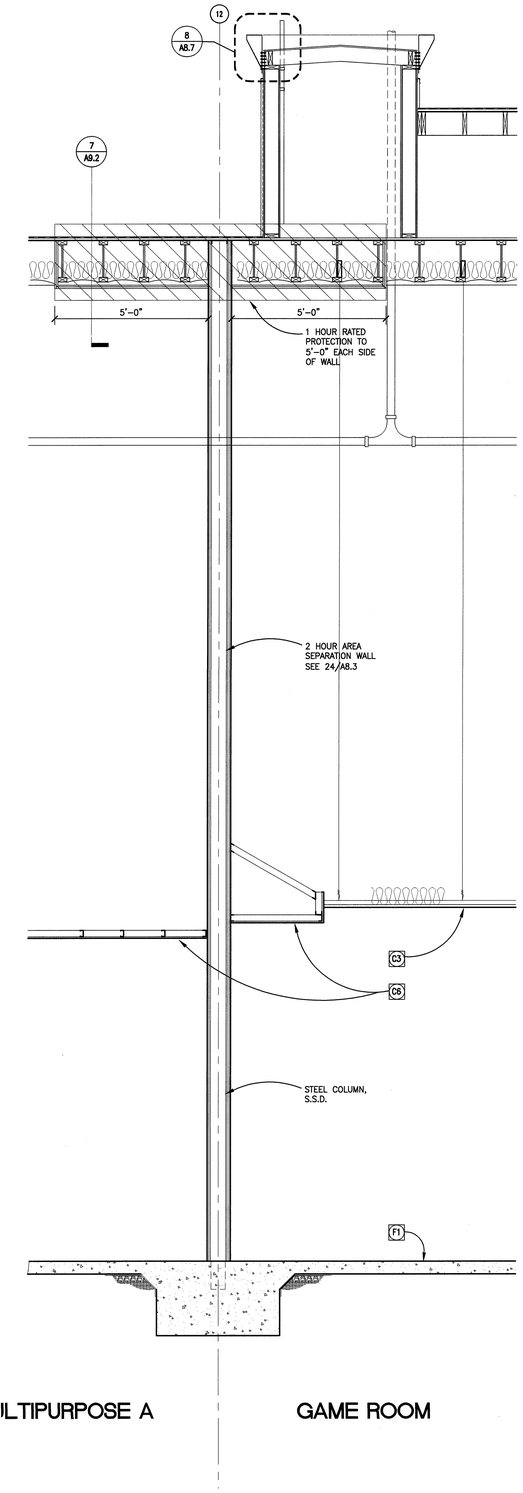


3 **WALL SECTION**
1/2"=1'-0" WALSEC1

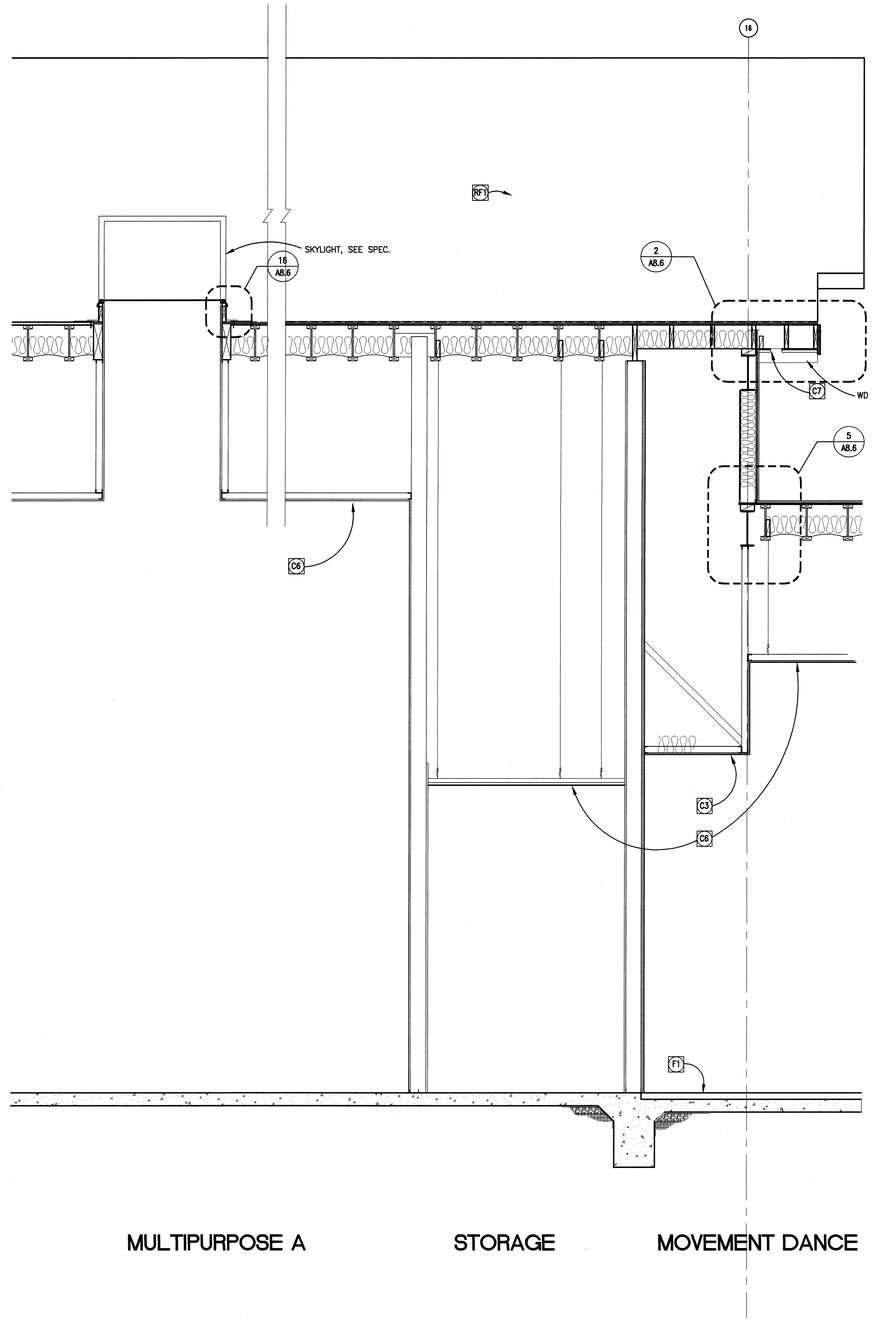


2 **WALL SECTION**
1/2"=1'-0" WALSEC1

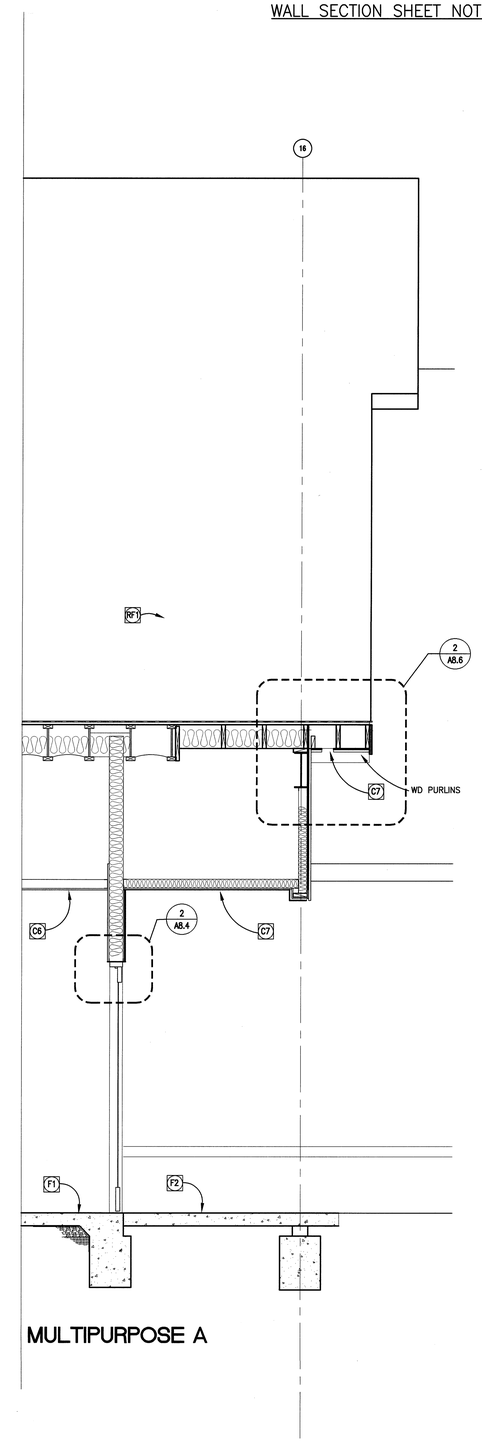


1 **WALL SECTION**
1/2"=1'-0" WALSEC1

0 1' 2' 5' 10'

BSA ARCHITECTS
A California Corporation
501 Folsom Street, Fourth Floor
San Francisco, CA 94105
415-281-4720

LICENSED ARCHITECT DAVID A. ROSS No. C26056 REN. 6-30-05 STATE OF CALIFORNIA

# MOUNTAIN VIEW SENIOR CENTER

266 ESCUELA AVE
MOUNTAIN VIEW, CA

DATE: APRIL 18, 2005

REVISIONS:

CONSTRUCTION SET

SHEET TITLE:

WALL SECTIONS

© 2005 BSA Architects
"All drawings and written material appearing herein constitute the original and unpublished work of the architect and the same may not be duplicated, used, or disclosed without the written consent of the architect."

DRAWN BY:
CHECKED BY: GJ
JOB NO: 314.10

SHEET A3.22

03/18/04 A3-22

WALL SECTION SHEET NOTES: SEE SHEET A3.20

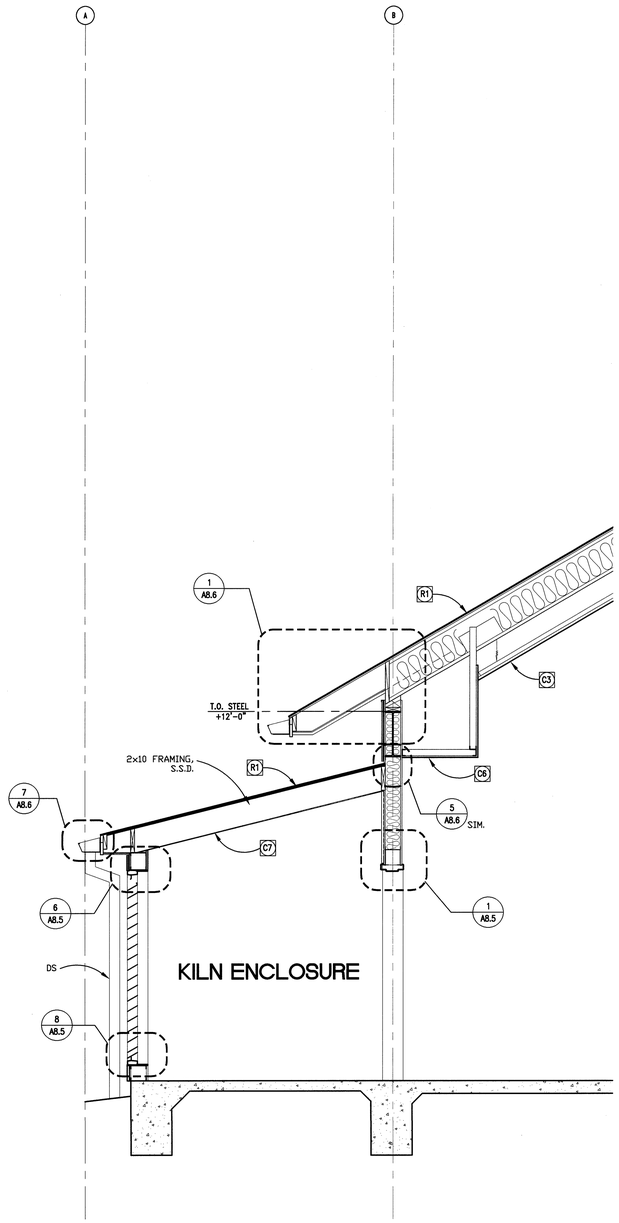


3 **WALL SECTION**
1/2"=1'-0"
WALSEC1

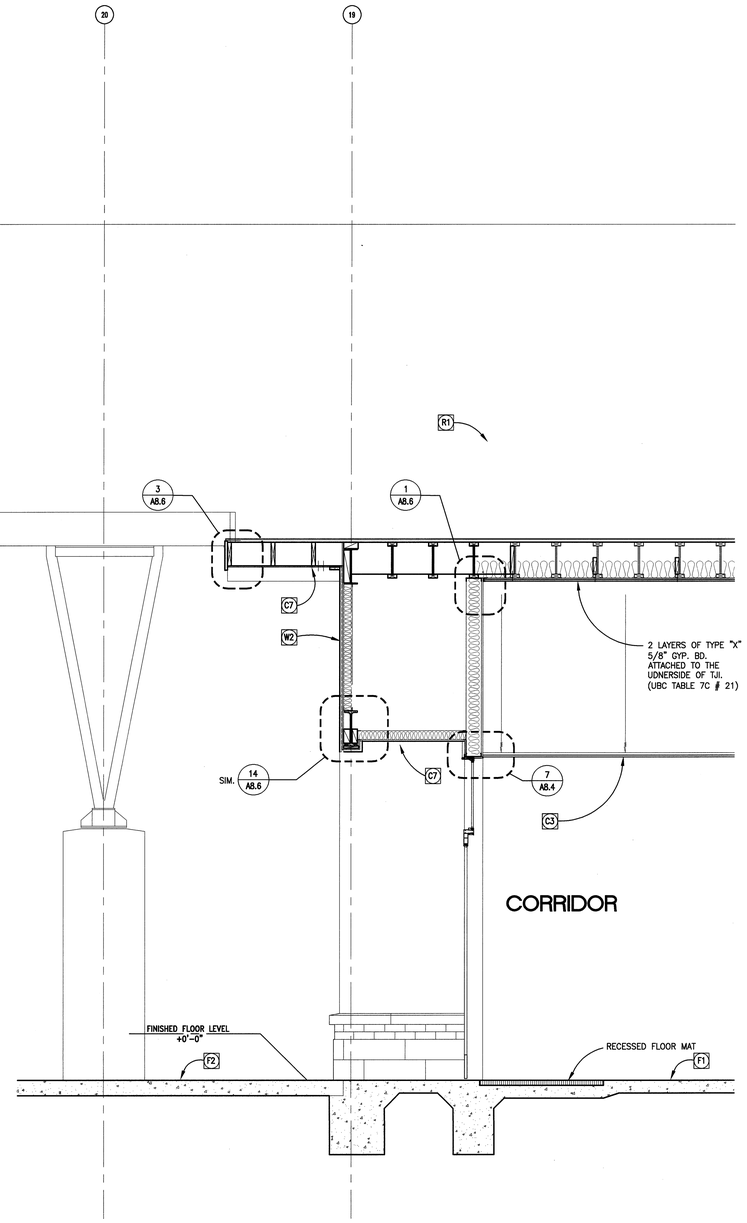


2 **WALL SECTION**
1/2"=1'-0"
WALSEC1

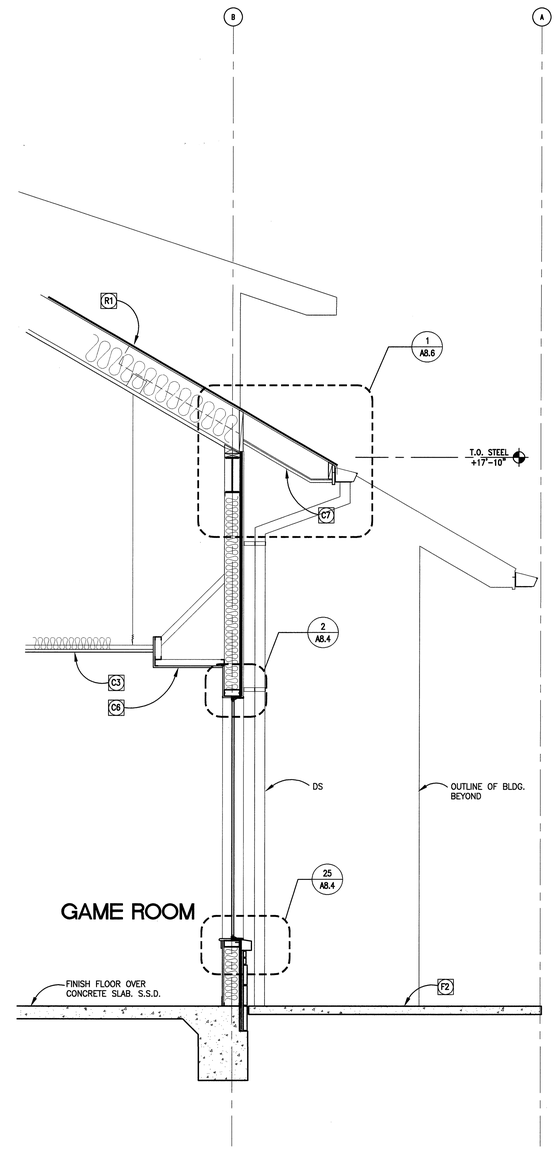


1 **WALL SECTION @ GAME ROOM**
1/2"=1'-0"
WALSEC1


BSA ARCHITECTS
A California Corporation
501 Folsom Street, Fourth Floor
San Francisco, CA 94105
415-281-4720


LICENSED ARCHITECT
KIRK R. VIG, JR.
No. C26056
EXP. 8-30-05
STATE OF CALIFORNIA

# MOUNTAIN VIEW SENIOR CENTER

266 ESCUELA AVE
MOUNTAIN VIEW, CA

DATE: APRIL 18, 2005

REVISIONS:

CONSTRUCTION SET

SHEET TITLE:

WALL SECTIONS


© 2005 BSA Architects
"All drawings and written material appearing herein constitute the original and unpublished work of the architect and the same may not be duplicated, used, or disclosed without the written consent of the architect."


DRAWN BY:
CHECKED BY: GJ
JOB NO: 314.10

SHEET
A3.23

03/18/04 A3-23

WALL SECTION SHEET NOTES: SEE SHEET A3.20

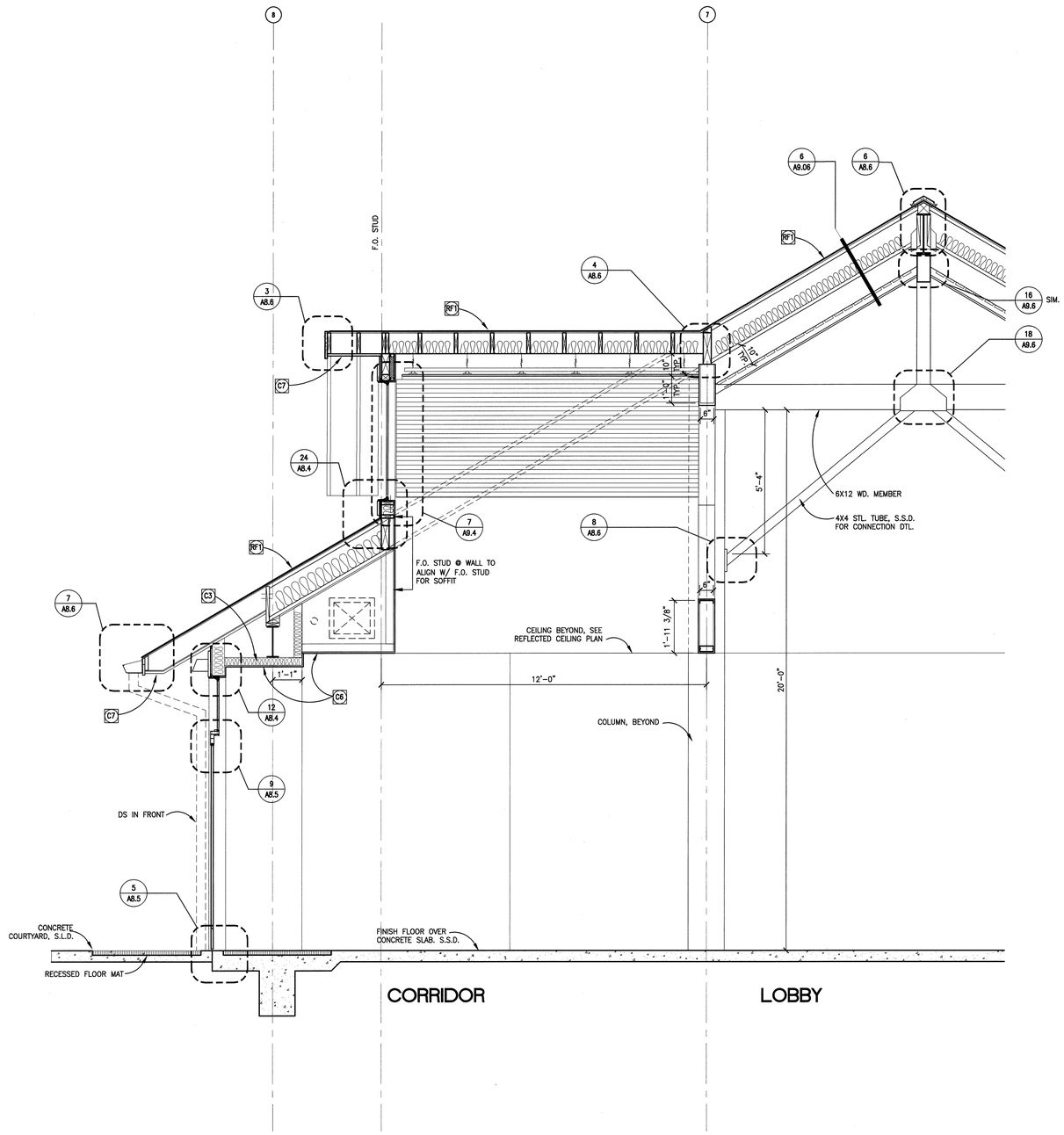


**2 WALL SECTION @ LOBBY**
1/2"=1'-0" WALSEC1

**1 WALL SECTION**
1/2"=1'-0" WALSEC1

0 1' 2' 5' 10'


BSA ARCHITECTS
A California Corporation
501 Folsom Street, Fourth Floor
San Francisco, CA 94105
415-281-4720


LICENSED ARCHITECT
No. C26056
REN. 6-30-05
STATE OF CALIFORNIA

MOUNTAIN VIEW
SENIOR CENTER

266 ESCUELA AVE
MOUNTAIN VIEW, CA

DATE: APRIL 18, 2005

REVISIONS:

CONSTRUCTION SET

SHEET TITLE:

WALL SECTIONS


© 2005 BSA Architects
"All drawings and written material appearing herein constitute the original and unpublished work of the architect and the same may not be duplicated, used, or disclosed without the written consent of the architect."


DRAWN BY:
CHECKED BY: GJ
JOB NO: 314.10

SHEET
A3.24

03/18/04 A3-24

WALL SECTION SHEET NOTES: SEE SHEET A3.20

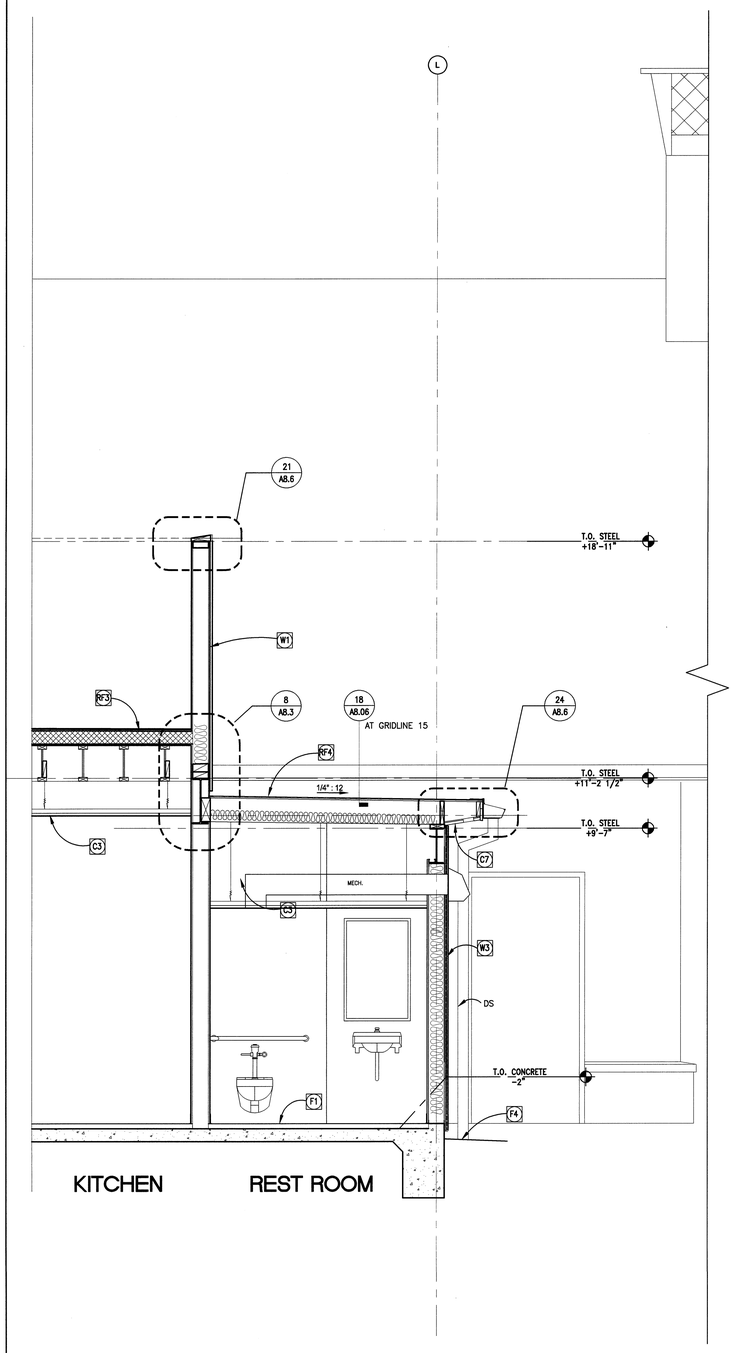


3 WALL SECTION @ KITCHEN
1/2"=1'-0" WALSEC1

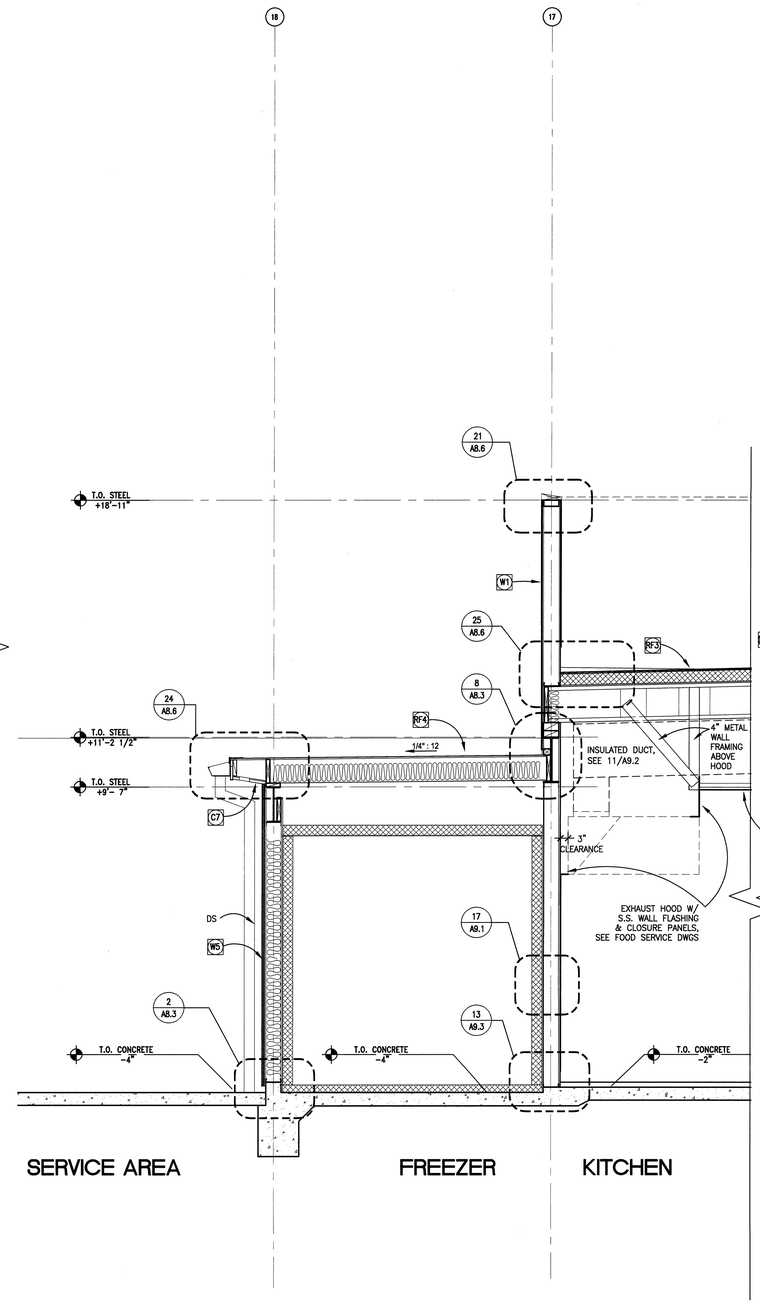


2 WALL SECTION @ KITCHEN
1/2"=1'-0" WALSEC1

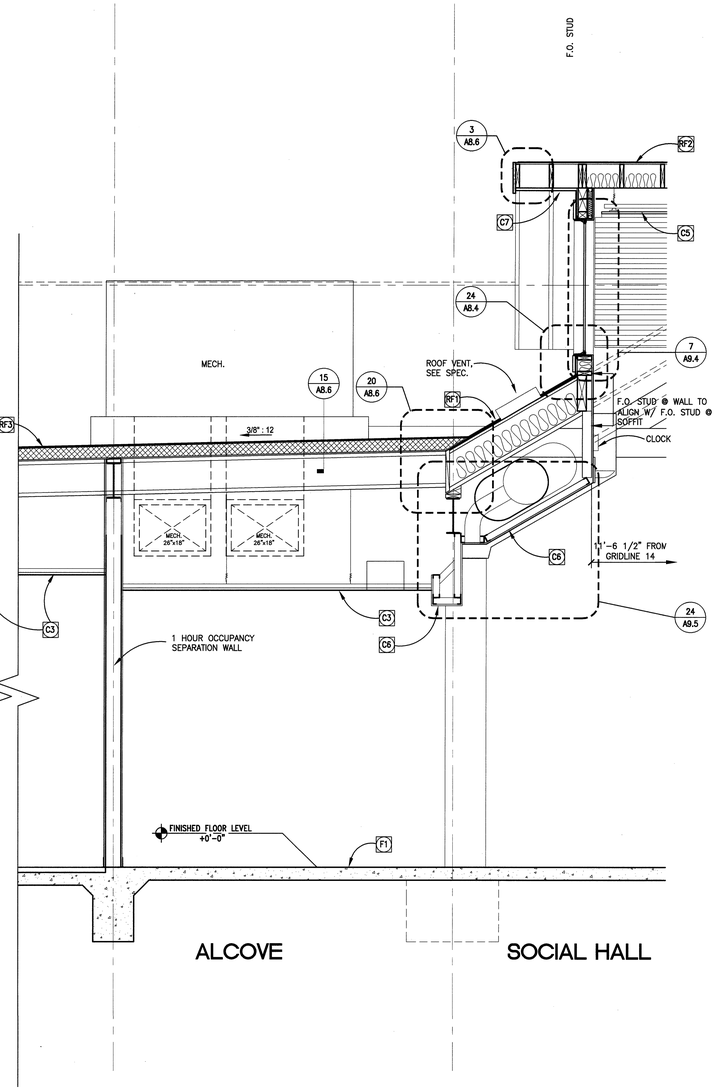


1 WALL SECTION @ SOCIAL HALL
1/2"=1'-0" WALSEC1

0 1' 2' 5' 10'


BSA ARCHITECTS
A California Corporation
501 Folsom Street, Fourth Floor
San Francisco, CA 94105
415-281-4720


LICENSED ARCHITECT
No. C26056
REN. 6-30-06
STATE OF CALIFORNIA

# MOUNTAIN VIEW SENIOR CENTER

266 ESCUELA AVE
MOUNTAIN VIEW, CA

DATE: APRIL 18, 2005

REVISIONS:

CONSTRUCTION SET

SHEET TITLE:

WALL SECTIONS


© 2005 BSA Architects
"All drawings and written material appearing herein constitute the original and unpublished work of the architect and the same may not be duplicated, used, or disclosed without the written consent of the architect."


DRAWN BY:
CHECKED BY: GJ
JOB NO: 314.10

SHEET A3.25

03/18/04 A3-25

WALL SECTION SHEET NOTES: SEE SHEET A3.20

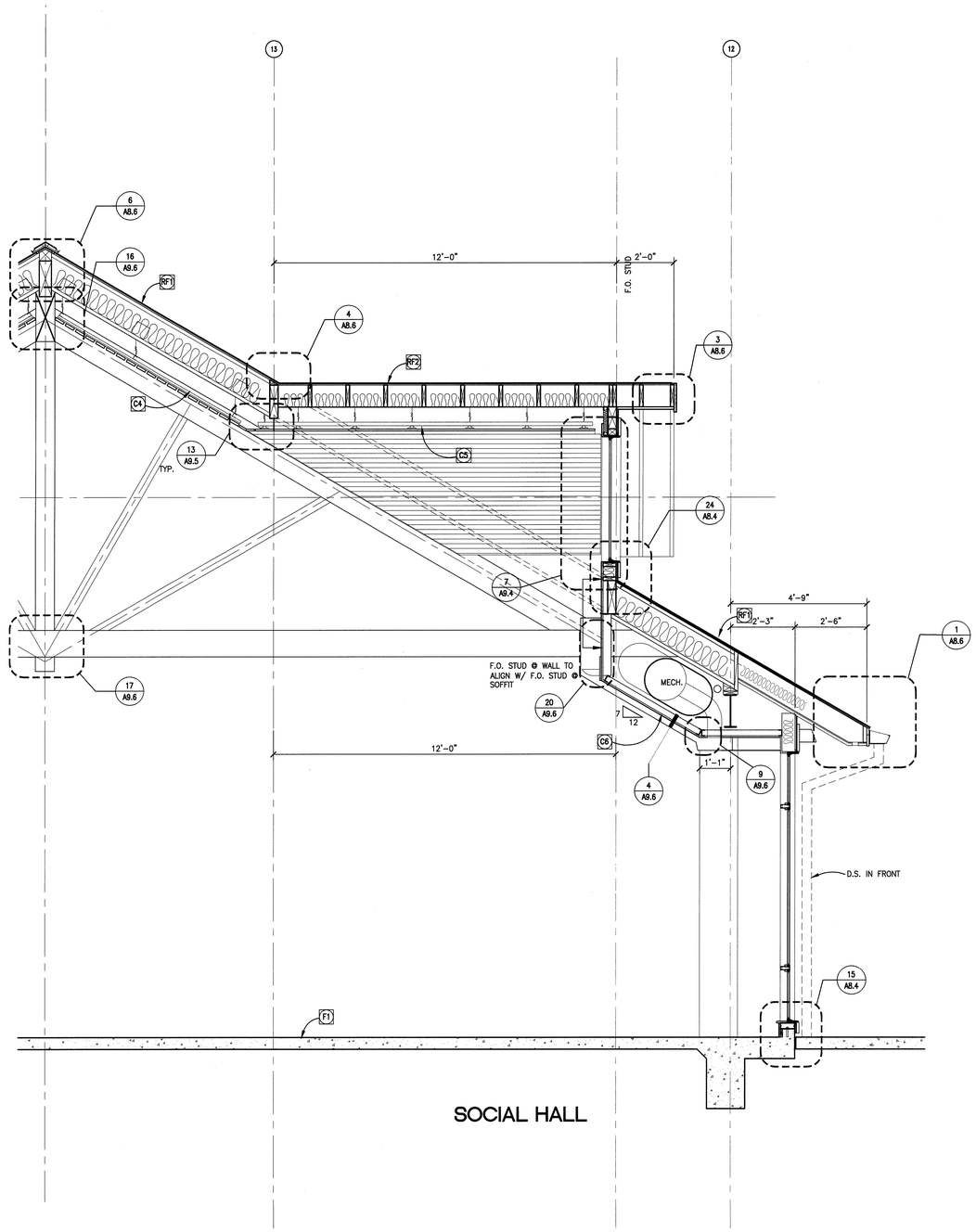


2 **WALL SECTION @ SOCIAL HALL**
1/2"=1'-0"
WALSEC1

1 **INTERIOR ELEVATION @ SOCIAL HALL**
1/2"=1'-0"
WALSEC1

0 1' 2' 5' 10'


BSA ARCHITECTS
A California Corporation
501 Folsom Street, Fourth Floor
San Francisco, CA 94105
415-281-4720


KICKENSED ARCHITECT
DAVID D. BASS
No. C26056
REN. 6-30-06
STATE OF CALIFORNIA

# MOUNTAIN VIEW SENIOR CENTER

266 ESCUELA AVE
MOUNTAIN VIEW, CA

DATE: APRIL 18, 2005

REVISIONS:

CONSTRUCTION SET

SHEET TITLE:

WALL SECTIONS


© 2005 BSA Architects
"All drawings and written material appearing herein constitute the original and unpublished work of the architect and the same may not be duplicated, used, or disclosed without the written consent of the architect."


DRAWN BY:
CHECKED BY: GJ
JOB NO: 314.10

SHEET
A3.26

03/18/04 A3-26

WALL SECTION SHEET NOTES: SEE SHEET A3.20

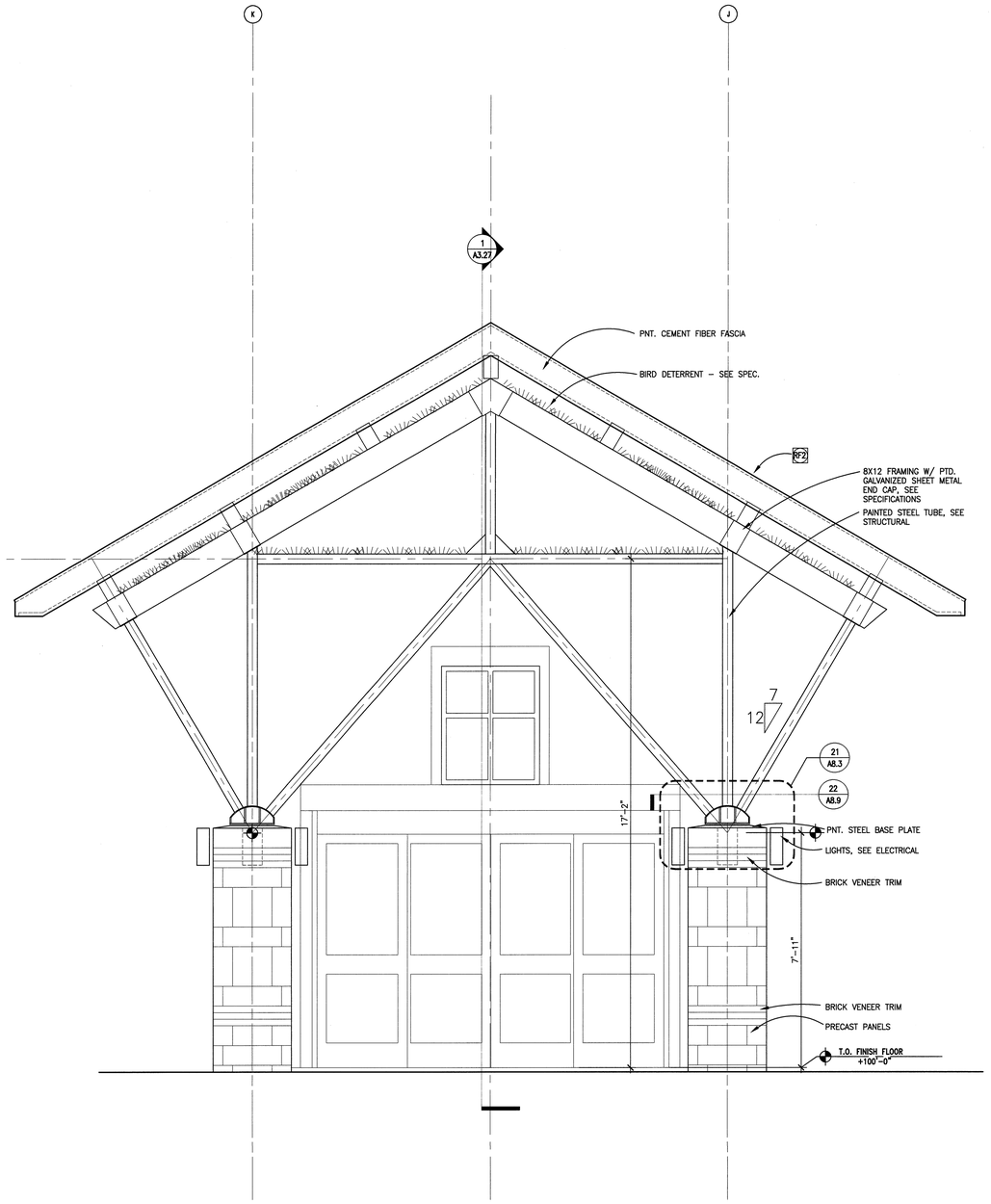


2 **ELEVATION @ ENTRY PORCH**
1/2"=1'-0"
WALSEC1

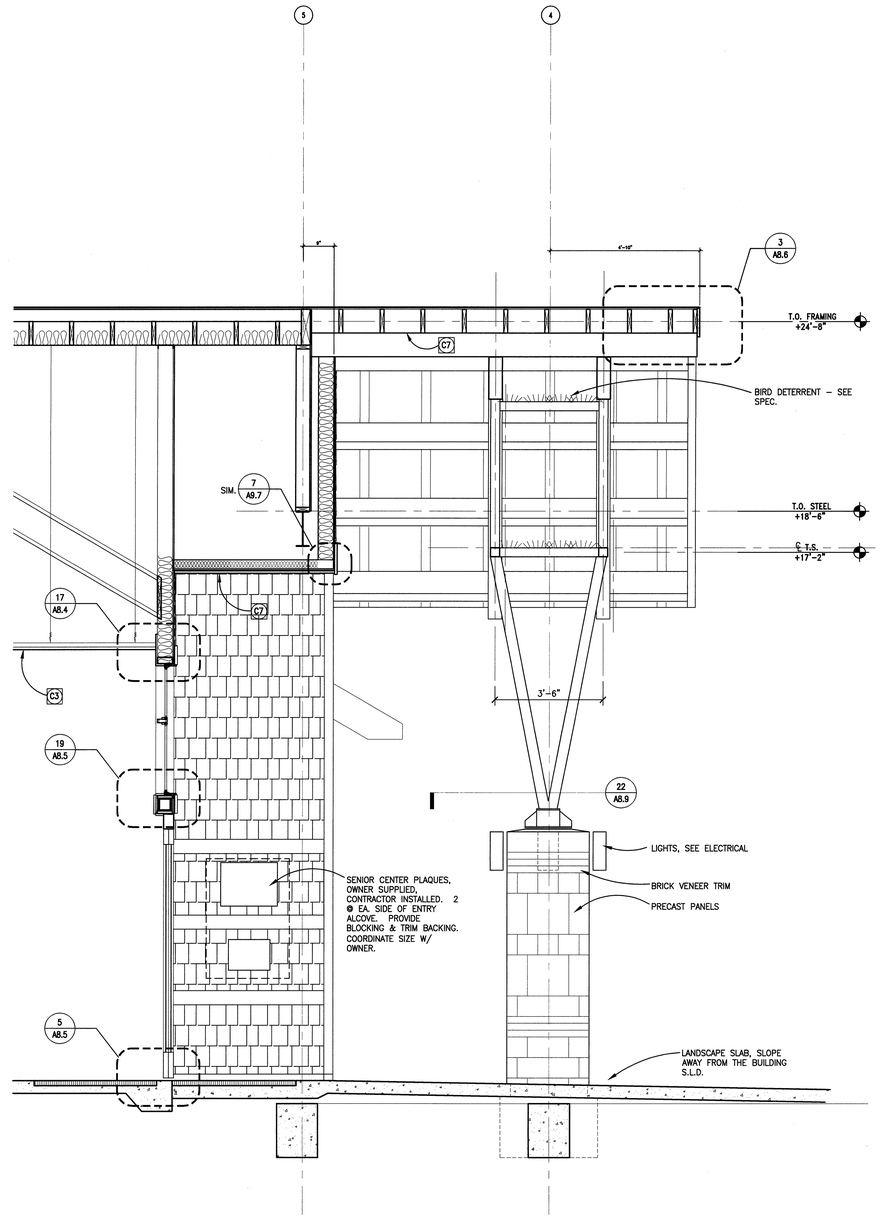


1 **SECTION @ ENTRY PORCH**
1/2"=1'-0"
WALSEC1

0 1' 2' 5' 10'


BSA ARCHITECTS
A California Corporation
501 Folsom Street, Fourth Floor
San Francisco, CA 94105
415-281-4720


LICENSED ARCHITECT
No. C26056
REN. 8-30-06
STATE OF CALIFORNIA

# MOUNTAIN VIEW SENIOR CENTER

266 ESCUELA AVE
MOUNTAIN VIEW, CA

DATE: APRIL 18, 2005

REVISIONS:

CONSTRUCTION SET

SHEET TITLE:

## WALL SECTIONS


© 2005 BSA Architects
"All drawings and written material appearing herein constitute the original and unpublished work of the architect and the same may not be duplicated, used, or disclosed without the written consent of the architect."


DRAWN BY: HK
CHECKED BY: GJ
JOB NO: 314.10

SHEET
A3.27

03/18/04 A3-27

WALL SECTION SHEET NOTES: SEE SHEET A3.20

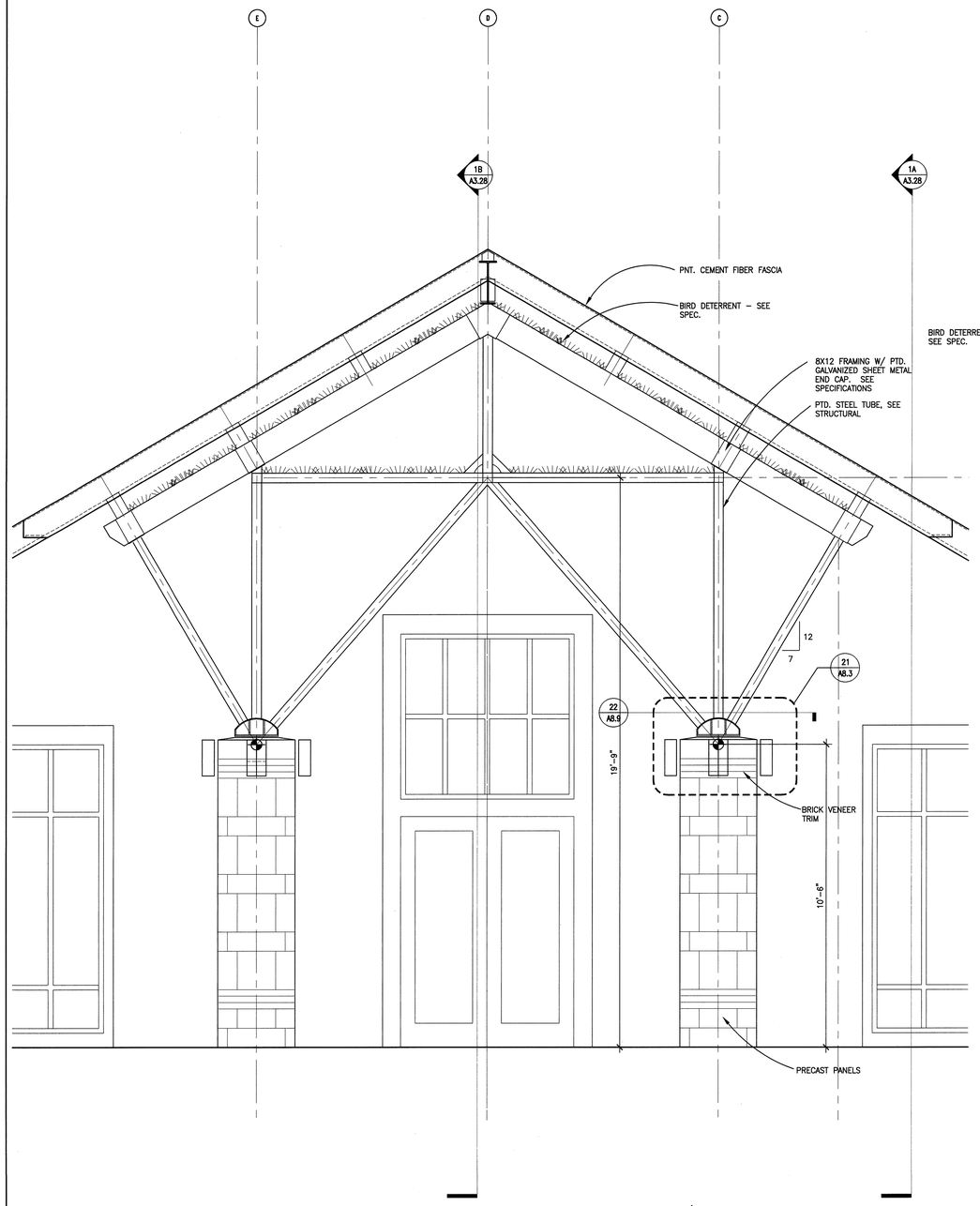


2 **ELEVATION @ PORCH**
1/2"=1'-0" WALSEC1

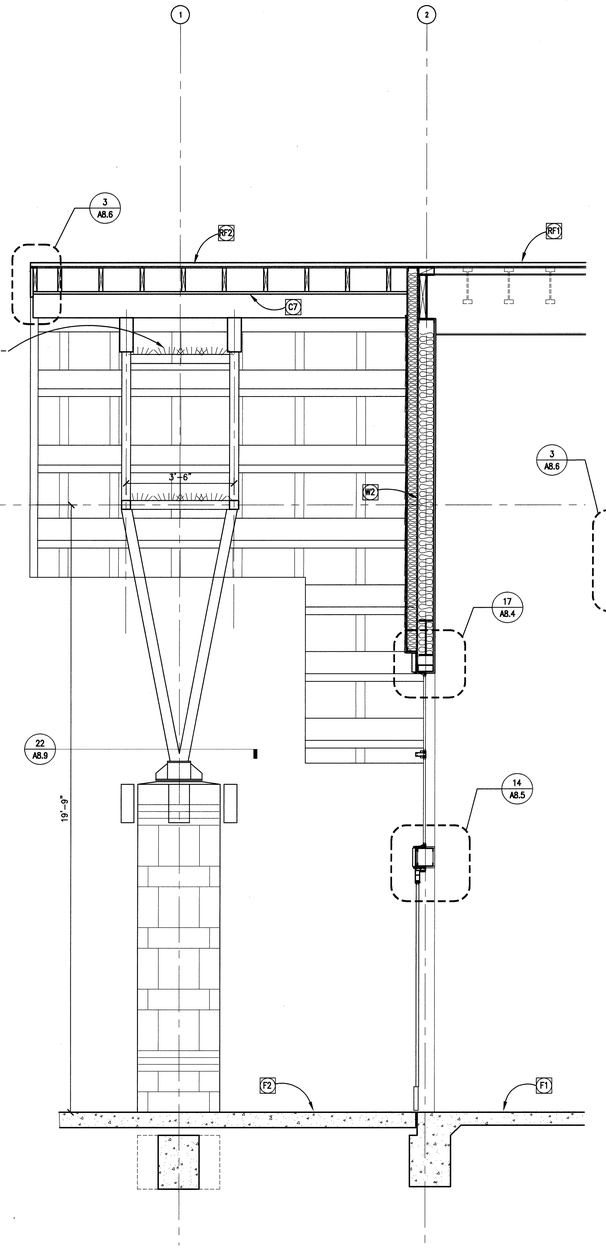


1B **SECTION @ PORCH**
1/2"=1'-0" WALSEC1

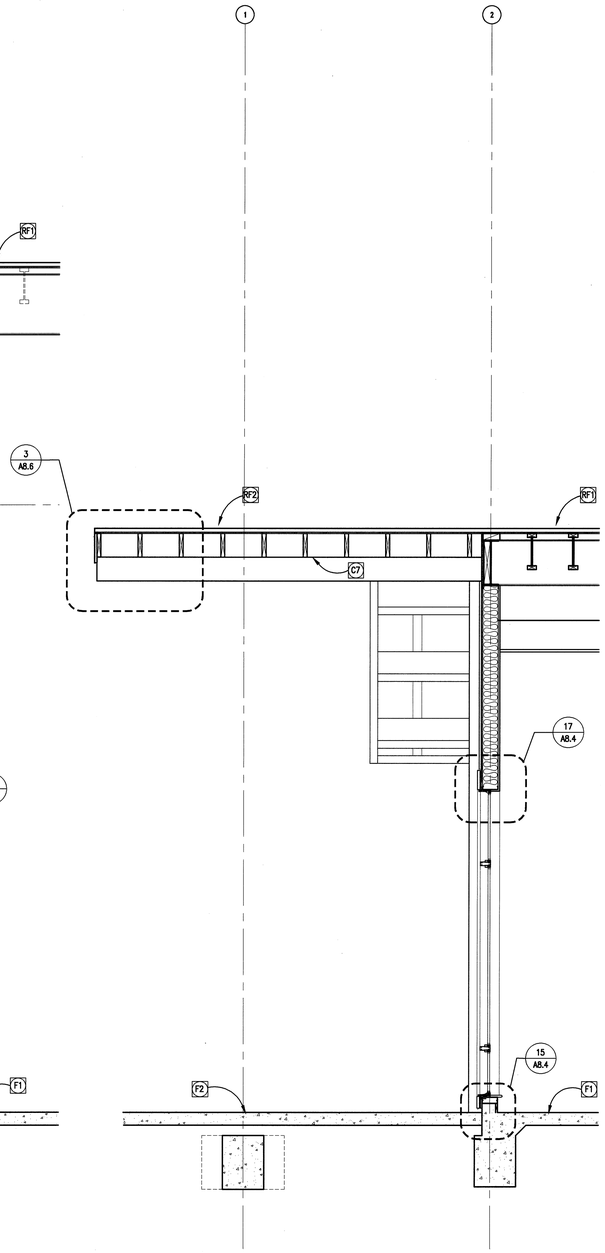


1A **SECTION @ PORCH**
1/2"=1'-0"

0 1' 2' 5' 10'


BSA ARCHITECTS
A California Corporation
501 Folsom Street, Fourth Floor
San Francisco, CA 94105
415-281-4720


LICENSED ARCHITECT
No. C26056
REN. 8-30-05
STATE OF CALIFORNIA

# MOUNTAIN VIEW SENIOR CENTER

266 ESCUELA AVE
MOUNTAIN VIEW, CA

DATE: APRIL 18, 2005

CONSTRUCTION SET

SHEET TITLE:

## WALL SECTIONS


© 2005 BSA Architects
"All drawings and written material appearing herein constitute the original and unpublished work of the architect and the same may not be duplicated, used, or disclosed without the written consent of the architect."


DRAWN BY: HK
CHECKED BY: GJ
JOB NO: 314.10

SHEET
A3.28

03/18/04 A3-28

WALL SECTION SHEET NOTES: SEE SHEET A3.20

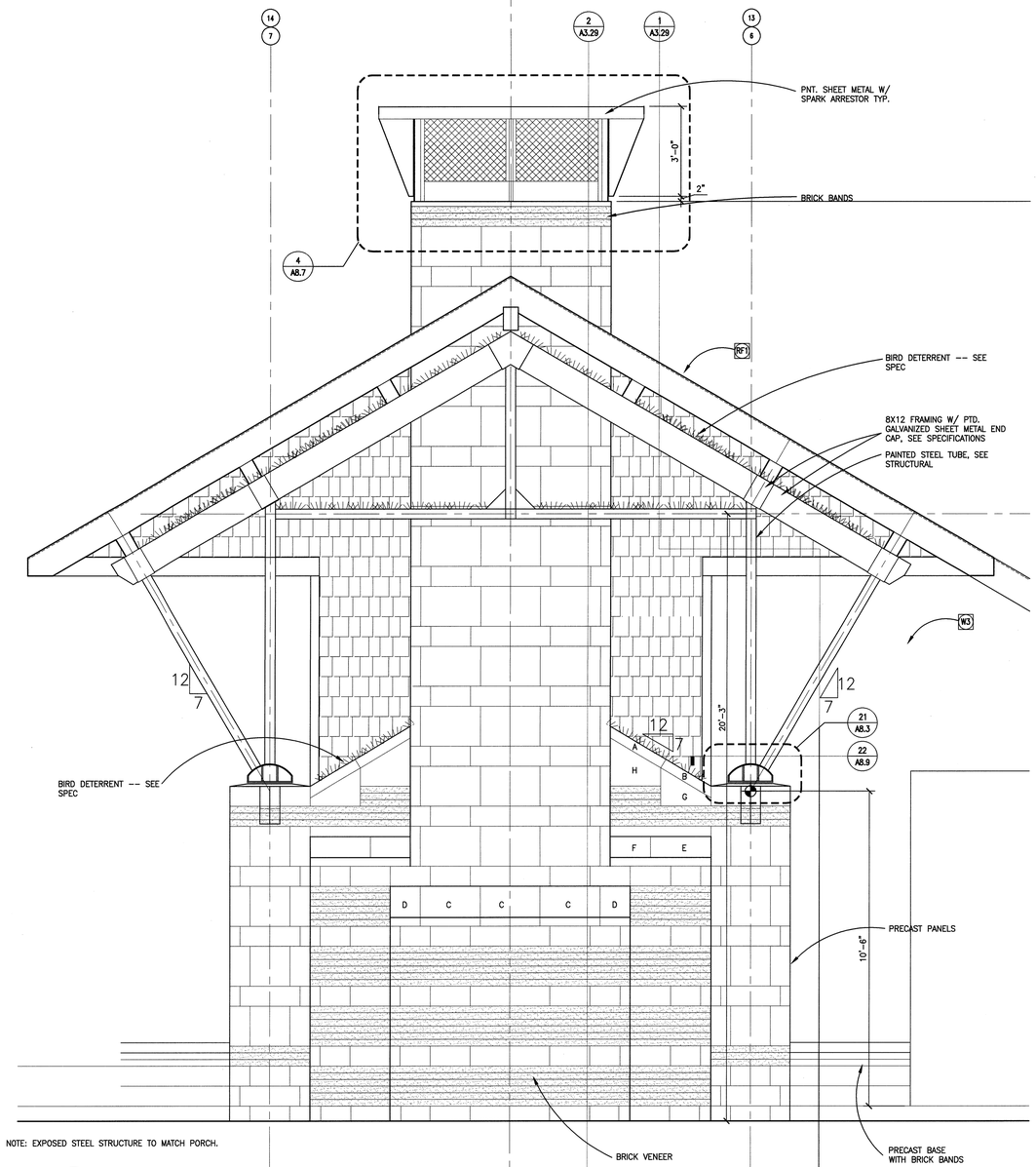


NOTE: EXPOSED STEEL STRUCTURE TO MATCH PORCH.

**4 ELEVATION @ SOCIAL HALL FIREPLACE, LOUNGE SIM.**
1/2"=1'-0" WALSEC321

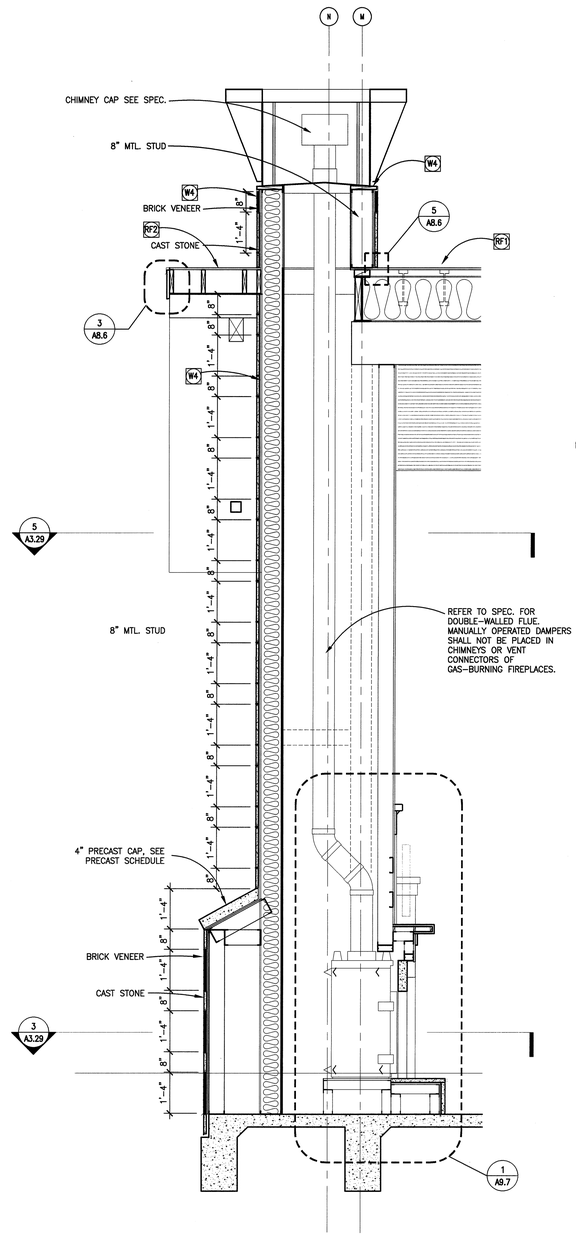


**2 WALL SECTION @ CHIMNEY**
1/2"=1'-0" WALSEC321

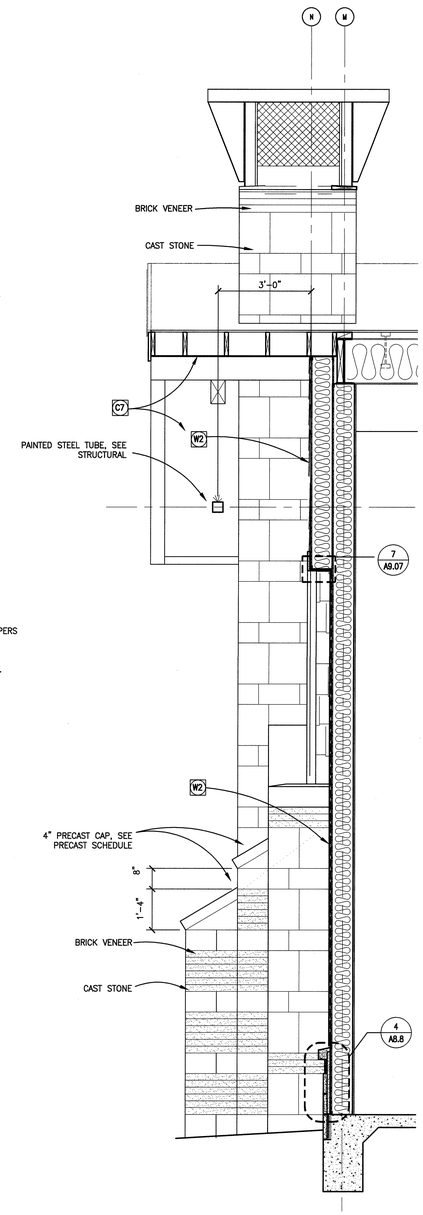


**1 ELEVATION @ CHIMNEY**
1/2"=1'-0"

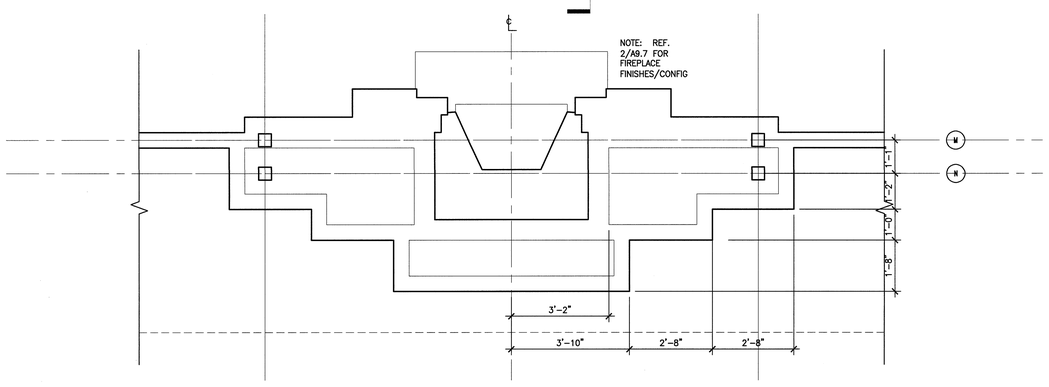


**3 UPPER PLAN @ SOCIAL HALL FIREPLACE, LOUNGE SIM.**
1/2"=1'-0" WALSEC321

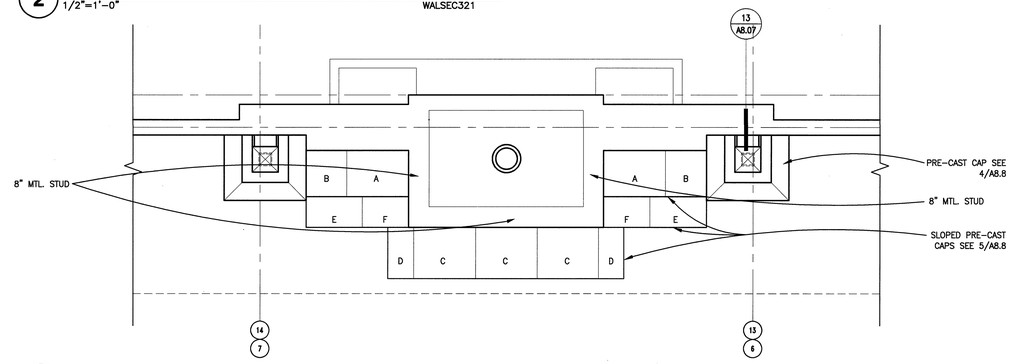


**5 LOWER PLAN @ SOCIAL HALL FIREPLACE, LOUNGE SIM.**
1/2"=1'-0" WALSEC321

0 1' 2' 5' 10'


BSA ARCHITECTS
A California Corporation
501 Folsom Street, Fourth Floor
San Francisco, CA 94105
415-281-4720


LICENSED ARCHITECT No. C26056 REN. 6-30-05 STATE OF CALIFORNIA

# MOUNTAIN VIEW SENIOR CENTER

266 ESCUELA AVE
MOUNTAIN VIEW, CA

DATE: APRIL 18, 2005

REVISIONS:

CONSTRUCTION SET

SHEET TITLE:

WALL SECTIONS


© 2005 BSA Architects
"All drawings and written material appearing herein constitute the original and unpublished work of the architect and the same may not be duplicated, used, or disclosed without the written consent of the architect."


DRAWN BY: HK
CHECKED BY: GJ
JOB NO: 314.10

SHEET A3.29

03/18/04 A3-29