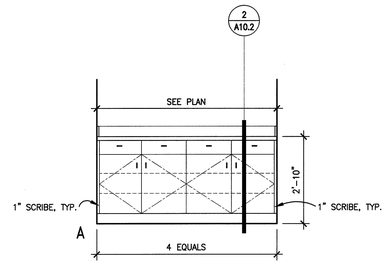

4 ALCOVE @ SOCIAL HALL
1/2" = 1'-0"
CASEWORK

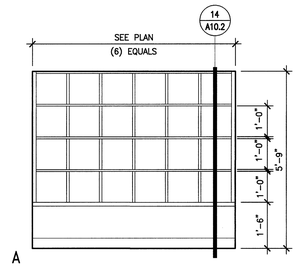

3 COBBIES @ MOVEMENT & DANCE
1/2" = 1'-0"
CASEWORK

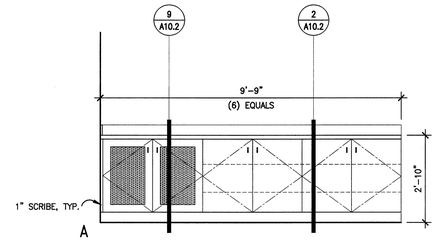

2 TECH ROOM
1/2" = 1'-0"
CASEWORK

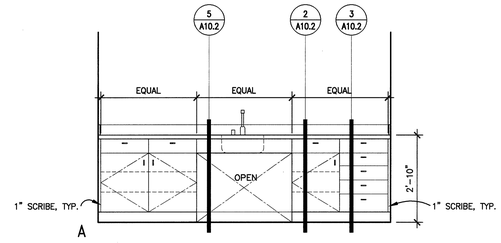

1 COFEE BAR
1/2" = 1'-0"
CASEWORK

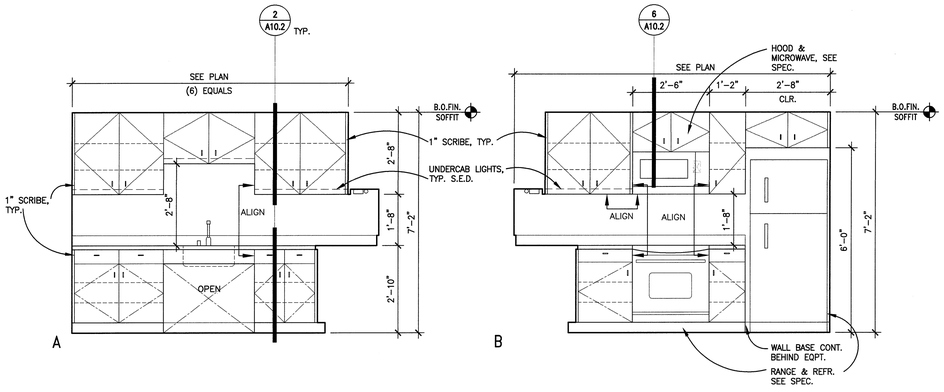

6 BREAK ROOM
1/2" = 1'-0"
CASEWORK

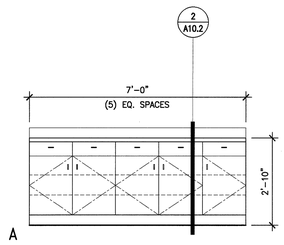

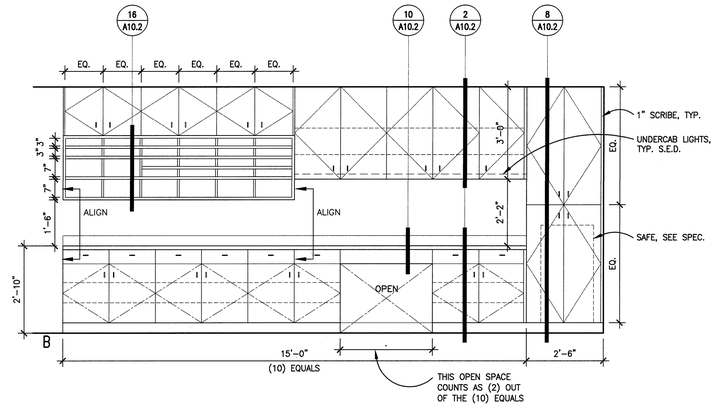

5 WORK ROOM
1/2" = 1'-0"
CASEWORK

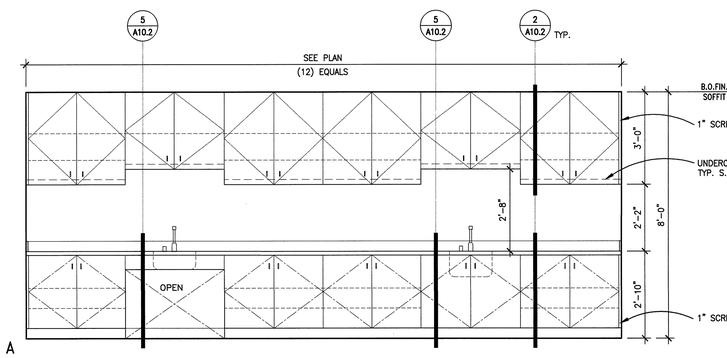

9 ARTS AND CRAFTS
1/2" = 1'-0"
CASEWORK

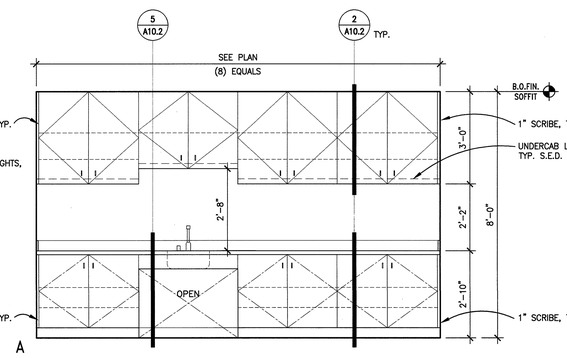

8 MULTIPURPOSE B.
1/2" = 1'-0"
CASEWORK

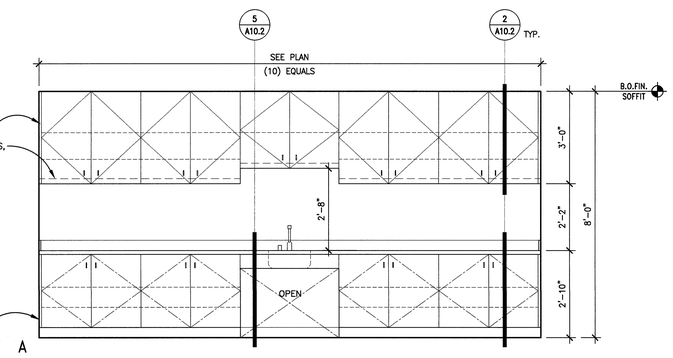

7 MULTIPURPOSE A.
1/2" = 1'-0"
CASEWORK

0 1' 4' 8' 12'

BSA ARCHITECTS
A California Corporation
501 Folsom Street, Fourth Floor
San Francisco, CA 94105
415-281-4720

LICENSED ARCHITECT
No. C26056
REN. 8-30-05
STATE OF CALIFORNIA

MOUNTAIN VIEW SENIOR CENTER

266 ESCUELA AVE
MOUNTAIN VIEW, CA

DATE: APRIL 18, 2005

REVISIONS: –

CONSTRUCTION SET

SHEET TITLE:
CASEWORK

© 2005 BSA Architects
"All drawings and written material appearing herein constitute the original and unpublished work of the architect and the same may not be duplicated, used, or disclosed without the written consent of the architect."

DRAWN BY: WC
CHECKED BY: GJ
JOB NO: 0314.10

SHEET
A10.1

6-4-04 A10-01.DWG

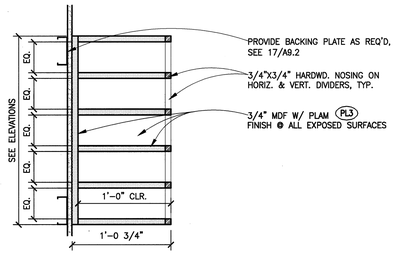

16 MAIL/FORMS SLOT DETAIL
SCALE: 1 1/2"=1'-0"
MAILSLOT

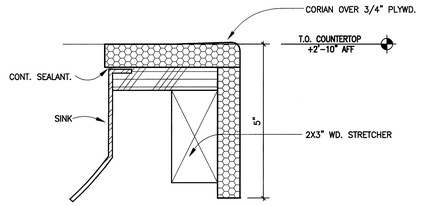

11 LAVATORY COUNTERTOP FASCIA
SCALE: 6"=1'-0"
MSNKNOSE

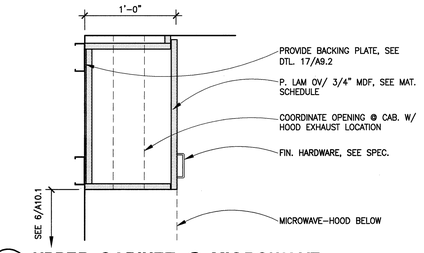

6 UPPER CABINET @ MICROWAVE
SCALE: 1 1/2"=1'-0"
MCABUPM

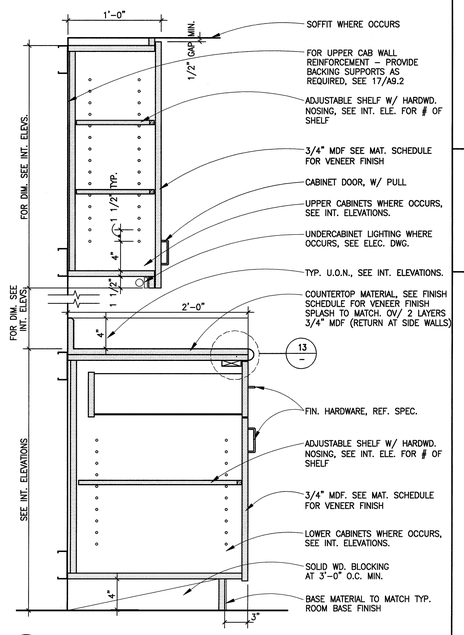

2 TYP. BASE & UPPER CABINETS
SCALE: 1 1/2"=1'-0"
mcabful1

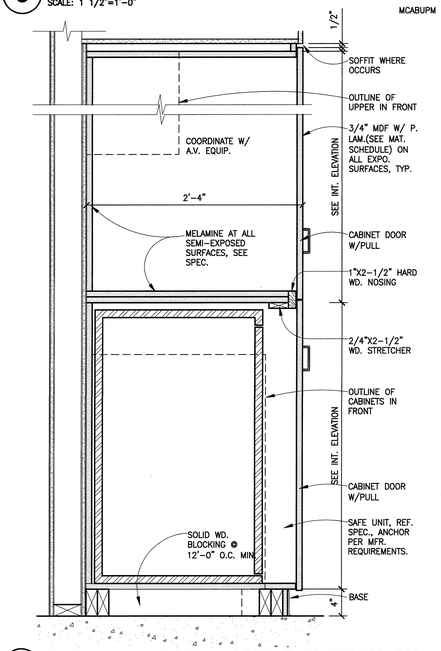

8 SECTION @ SAFE CABINET IN WORK RM.
SCALE: 1 1/2"=1'-0"
SAFESECT

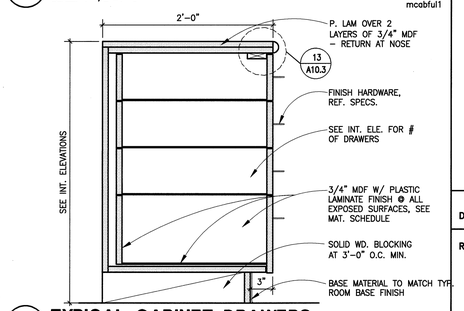

3 TYPICAL CABINET DRAWERS
SCALE: 1 1/2"=1'-0"
MCABDRAW

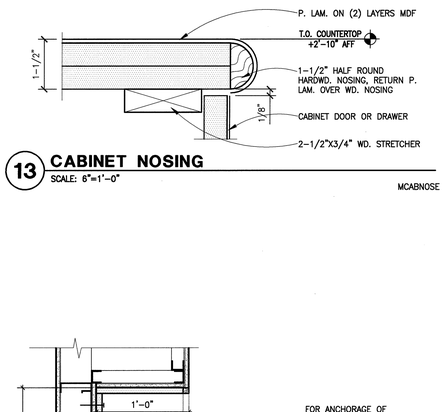

13 CABINET NOSING
SCALE: 6"=1'-0"
MCABNOSE

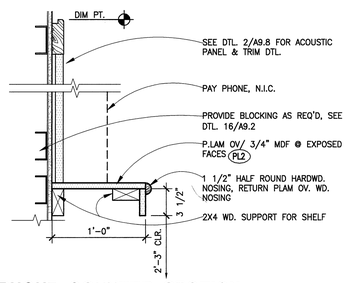

18 TELEPHONE COUNTER SECTION
SCALE: 1 1/2"=1'-0"
MCTRTEL

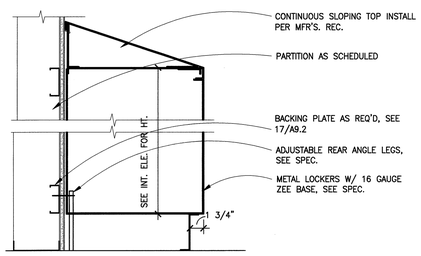

19 LOCKER TOP/BASE INSTALLATION
SCALE: 1 1/2"=1'-0"
MMTLKRTP

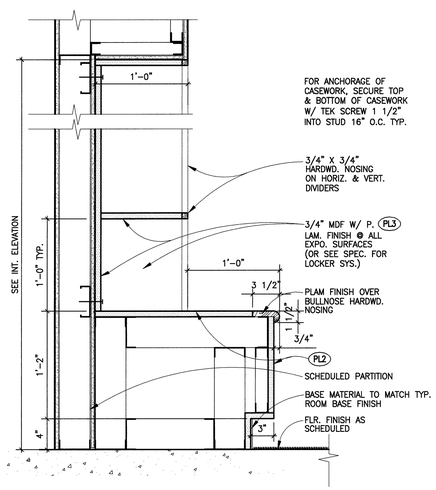

14 CUBBIES @ AEROBICS ROOM TYP.
SCALE: 1 1/2"=1'-0"
CUBBIES

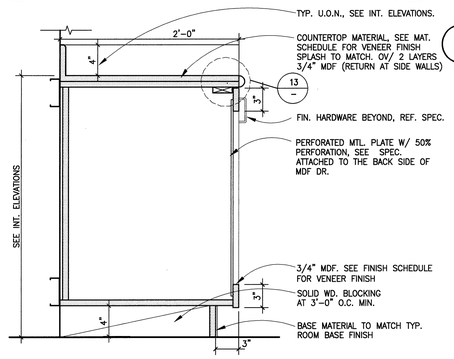

9 TYP. BASE & UPPER CABINETS
SCALE: 1 1/2"=1'-0"
mcabful1

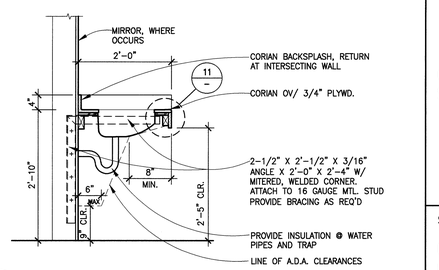

4 COUNTERTOP @ BATHROOM VANITIES
SCALE: 3/4"=1'-0"
MCOUTSNK

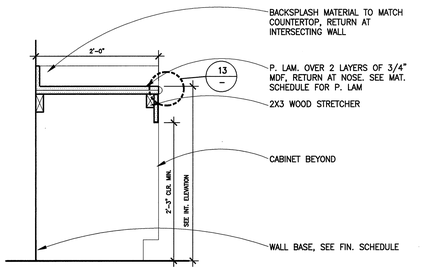

10 COUNTERTOP @ WORKROOM
SCALE: 1"=1'-0"
MCABCTR

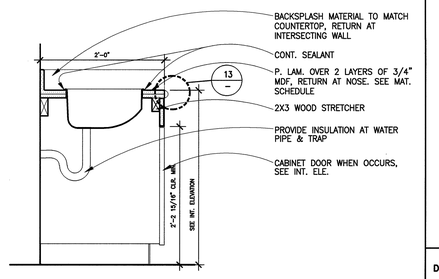

5 COUNTERTOP SECTION @ SINK
SCALE: 1"=1'-0"
MCABSINK

BSA ARCHITECTS
A California Corporation
501 Folsom Street, Fourth Floor
San Francisco, CA 94105
415-281-4720

LICENSED ARCHITECT GONTI R. JAMES No. C26056 REN. 8-30-05 STATE OF CALIFORNIA

MOUNTAIN VIEW SENIOR CENTER

266 ESCUELA AVE
MOUNTAIN VIEW, CA

DATE: APRIL 18, 2005

REVISIONS:

CONSTRUCTION SET

SHEET TITLE:
CASEWORK DETAILS

© 2005 BSA Architects
"All drawings and written material appearing herein constitute the original and unpublished work of the architect and the same may not be duplicated, used, or disclosed without the written consent of the architect."

DRAWN BY: WC
CHECKED BY: GJ
JOB NO: 0314.10

SHEET A10.2

11-19-04 A10-02.DWG

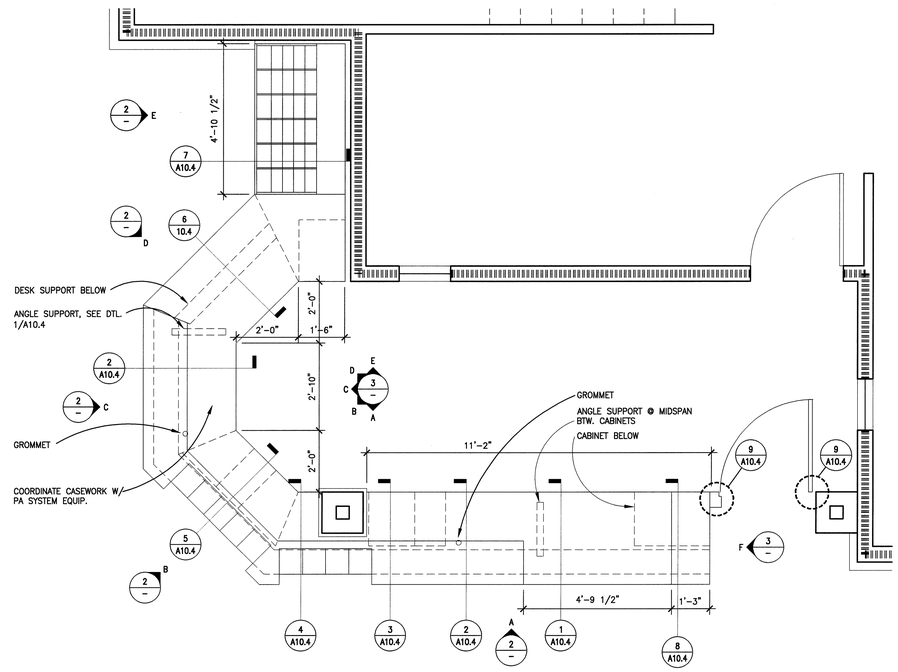

1 RECEPTION DESK PLAN
1/2" = 1'-0"
RECEPDK

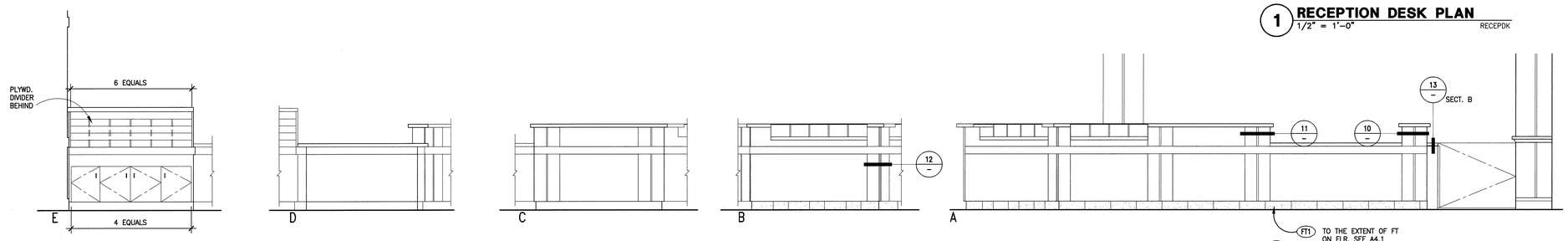

2 RECEPTION DESK ELEVATIONS
1/2" = 1'-0"
RECEPDK

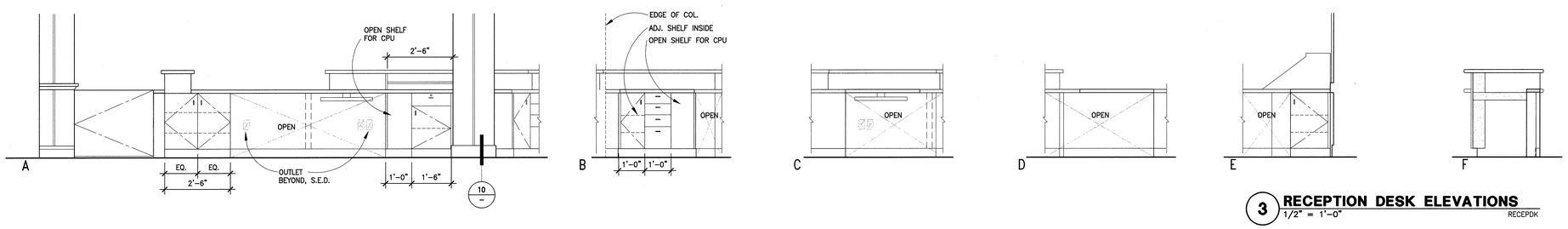

3 RECEPTION DESK ELEVATIONS
1/2" = 1'-0"
RECEPDK

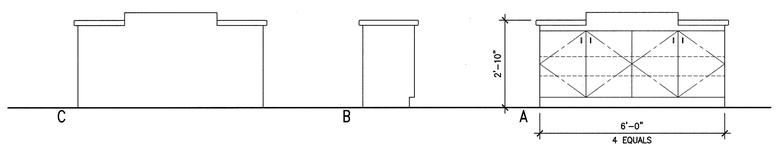

5 CREDENZA ELEVATIONS
1/2" = 1'-0"
RECEPDK

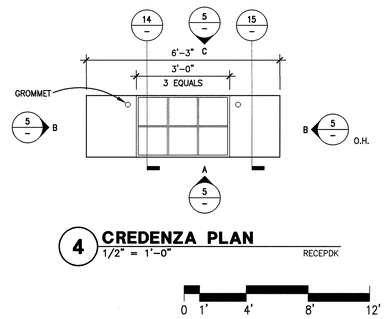

4 CREDENZA PLAN
1/2" = 1'-0"
RECEPDK

BSA ARCHITECTS
A California Corporation
501 Folsom Street, Fourth Floor
San Francisco, CA 94105
415-281-4720

LICENSED ARCHITECT
No. C26056
REN. 6-30-06
STATE OF CALIFORNIA

MOUNTAIN VIEW SENIOR CENTER

266 ESCUELA AVE
MOUNTAIN VIEW, CA

DATE: APRIL 18, 2005

REVISIONS: –

CONSTRUCTION SET

SHEET TITLE:

RECEPTION DESK PLAN & ELEVATIONS

© 2005 BSA Architects
"All drawings and written material appearing herein constitute the original and unpublished work of the architect and the same may not be duplicated, used, or disclosed without the written consent of the architect."

DRAWN BY: WC
CHECKED BY: GJ
JOB NO: 0314.10

SHEET A10.3

1-18-05 A10-03.DWG

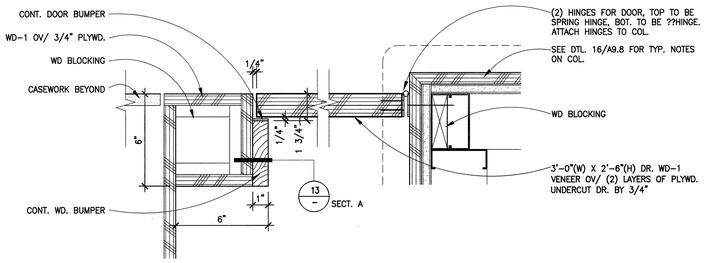

9 PLAN SECTION @ LOW HT. DR.
SCALE: 3"=1'-0" MRDKPLN

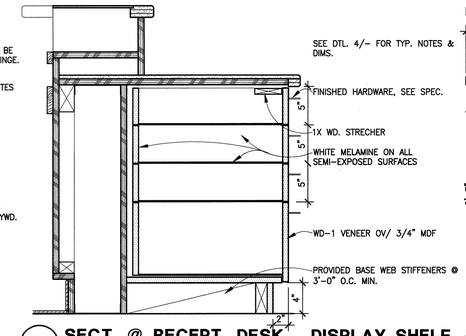

5 SECT. @ RECEPT. DESK - DISPLAY SHELF & DRAWERS
SCALE: 1 1/2"=1'-0" MRDESK5

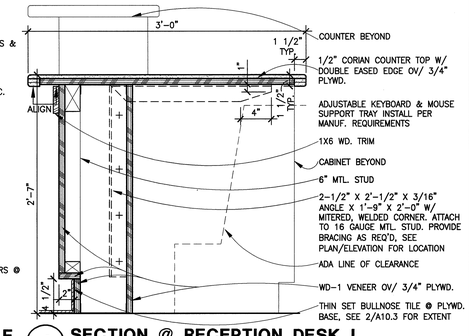

1 SECTION @ RECEPTION DESK I
SCALE: 1 1/2"=1'-0" MRDESK1

18

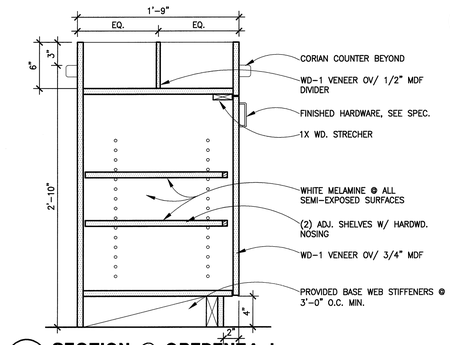

14 SECTION @ CREDENZA I
SCALE: 1 1/2"=1'-0" 2'-0" MCREDEN1

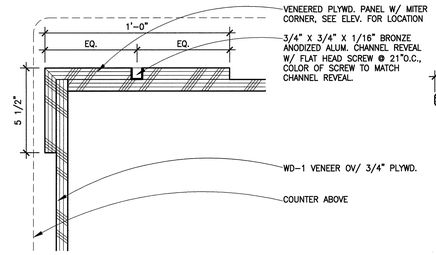

10 PLN. SECT. @ RECEPT. DESK END CORNER
SCALE: 3"=1'-0" MRDKPLN1

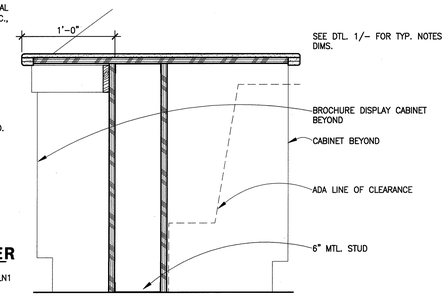

6 SECTION @ RECEPT. DESK - ADA STATION
SCALE: 1 1/2"=1'-0" MRDESK6

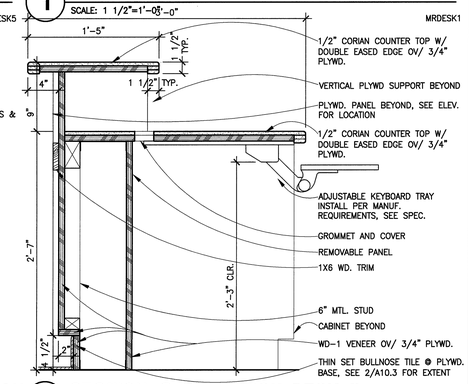

2 SECTION @ RECEPTION DESK II
SCALE: 1 1/2"=1'-0" MRDESK2

19

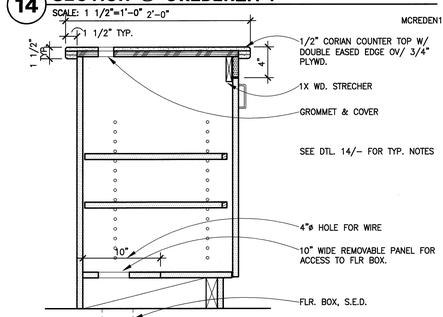

15 SECTION @ CREDENZA II
SCALE: 1 1/2"=1'-0" MCREDEN2

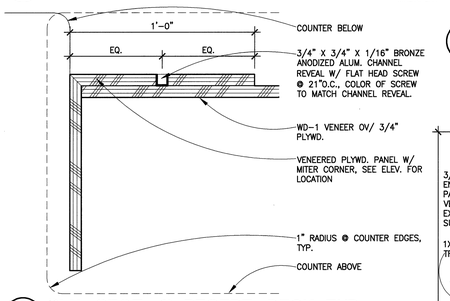

11 PLN. SECT. @ RECEPT. DESK TYP. END CONDITION
SCALE: 3"=1'-0" MRDKPLN2

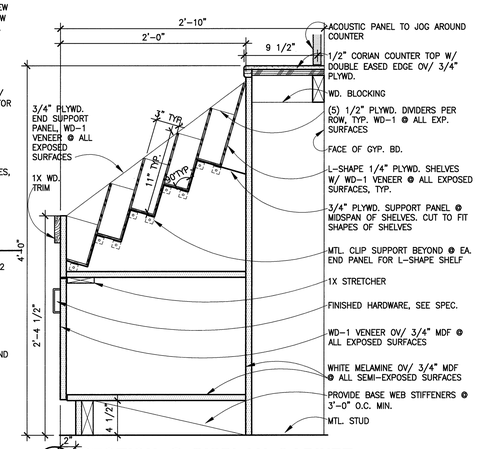

7 SECTION @ DISPLAY CABINET
SCALE: 1 1/2"=1'-0" MRDESK7

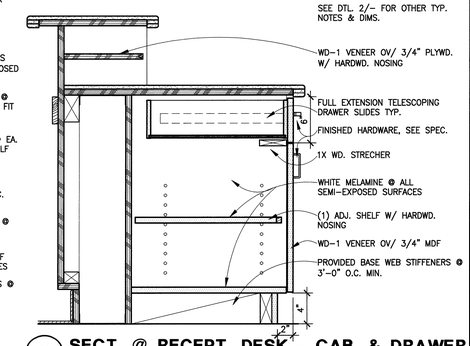

3 SECT. @ RECEPT. DESK - CAB. & DRAWER
SCALE: 1 1/2"=1'-0" MRDKCAB1

20

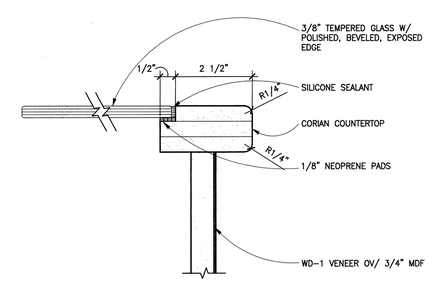

16 SECT. @ RECEPT. UPPER COUNTERTOP
SCALE: 6"=1'-0" MRDESK8

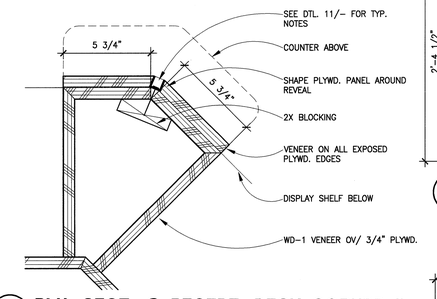

12 PLN. SECT. @ RECEPT. DESK CORNER II
SCALE: 3"=1'-0" MRDKPLN3

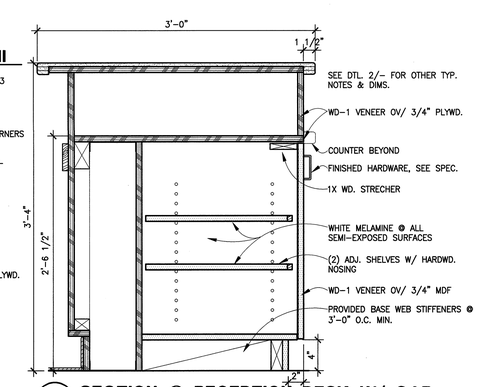

8 SECTION @ RECEPTION DESK W/ CAB.
SCALE: 1 1/2"=1'-0" MRDKCAB2

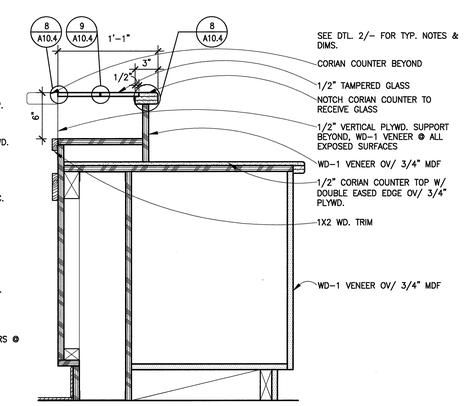

4 SECT. @ RECEPT. DESK - DISPLAY SHELF
SCALE: 1 1/2"=1'-0" MRDESK4

21

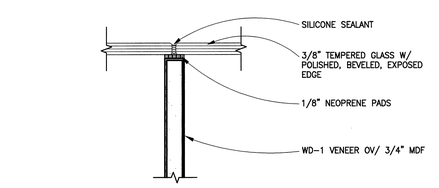

17 SECT. @ RECEPT. DESK GLASS
SCALE: 6"=1'-0" MRDESK9

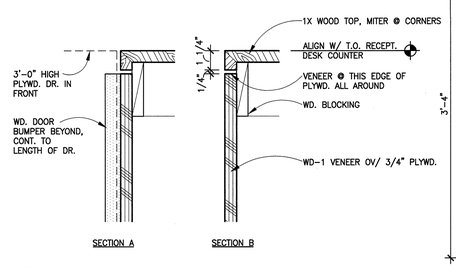

13 SECT. @ CASEWK. DOOR POST
SCALE: 3"=1'-0" MRDKDR

22

1-21-05 A10-04.DWG

BSA ARCHITECTS
A California Corporation
501 Folsom Street, Fourth Floor
San Francisco, CA 94105
415-281-4720

LICENSED ARCHITECT
GARY P. JOSEPH
No. C26056
REN. 8-30-05
STATE OF CALIFORNIA

MOUNTAIN VIEW SENIOR CENTER

266 ESCUELA AVE
MOUNTAIN VIEW, CA

DATE: APRIL 18, 2005

REVISIONS: –

CONSTRUCTION SET

SHEET TITLE:
CASEWORK DETAILS - RECEPTION DESK & MISC.

© 2005 BSA Architects
"All drawings and written material appearing herein constitute the original and unpublished work of the architect and the same may not be duplicated, used, or disclosed without the written consent of the architect."

DRAWN BY: WC
CHECKED BY: GJ
JOB NO: 0314.10

SHEET A10.4