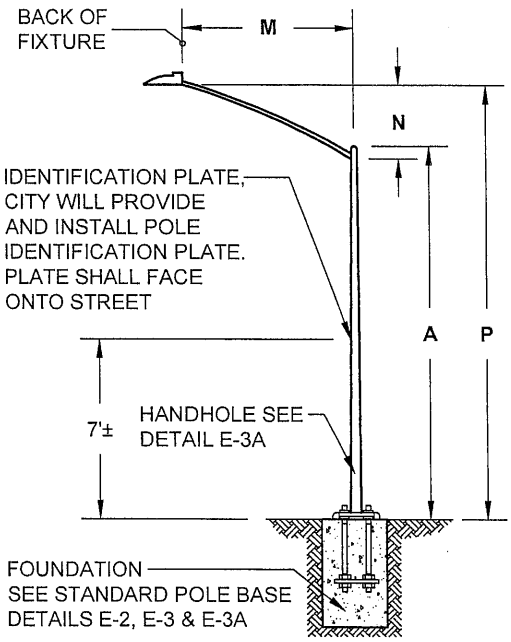

ELEVATION-TYPE 15

POLE TYPE	POLE DATA			
	A HEIGHT	MIN. O.D.		WALL THICKNESS
		BASE	TOP	
15	30'-0"	8"	3-11/16"	0.1196"

LUMINAIRE MAST ARM DATA				
M PROJECTED LENGTH	N RISE	MIN. O.D. AT POLE	NOMINAL THICKNESS	P - MOUNTING HEIGHT
				TYPE 15
6'-0"	2'-0"±	3-1/4"	0.1196"	31'-6"±
8'-0"	2'-6"±	3-1/2"		32'-0"±
10'-0"	3'-3"±	3-7/8"		32'-9"±
12'-0"	4'-3"±	3-7/8"		33'-9"±
15'-0"	4'-9"±	4-1/4"		34'-3"±

LED STREETLIGHT FIXTURE: LEOTEK EC-SERIES, GE ERS1-SERIES, OR APPROVED EQUAL.

STREET LIGHT DESIGN CRITERIA				
LAND USE AND/OR STREET CLASSIFICATION	MINIMUM MAST ARM LENGTH (FT)	LEDs		
		WATTAGE (W)	LUMENS (Lm)	VOLTAGE (V)
RESIDENTIAL	8	≤35	2,500-3,000	120-277
COMMERCIAL	12	≤75	6,500-7,000	120-277
INDUSTRIAL	12	≤75	6,500-7,000	120-277
ARTERIAL	12-15	≤95	8,000-9,000	120-277
INTERSECTION (SIGNAL & NON-SIGNAL)	12-15	≤145	10,900-12,000	120-277
MID-BLOCK CROSSWALKS				

NOTES:

1. HANDHOLE SHALL BE LOCATED ON DOWNSTREAM SIDE OF TRAFFIC.
2. POLE AND MAST ARM MUST BE UNPAINTED GALVANIZED STEEL.
3. SEE CURRENT CALTRANS STANDARD PLANS FOR LUMINAIRE MAST ARM CONNECTION DETAIL.
4. LUMINAIRES MUST BE LIGHT EMITTING DIODE (LED) WITH 4000K TO 4500K COLOR TEMPERATURE.
5. LEDs MUST PROVIDE ILLUMINATING ENGINEERING SOCIETY (IES) TYPE II DISTRIBUTION UNLESS OTHERWISE NOTED ON THE PLANS.
6. EACH STREETLIGHT MUST HAVE AN INDIVIDUAL AND INDEPENDENT PHOTO CELL.

Revision	Date	Approved
Drawn: TE	Date: 08-23-2016	
Checked: AB	Scale: NTS	

APPROVED BY: Jacqueline C. Solomon

9/2/2016 DATE — 12-31-2017 EXP. — 57093 R.C.E. NO.

REGISTERED PROFESSIONAL ENGINEER — JACQUELINE ANDREWS SOLOMON — No. 57093 — CIVIL — STATE OF CALIFORNIA

CITY OF MOUNTAIN VIEW
PUBLIC WORKS DEPARTMENT
STANDARD DETAIL

STANDARD ELECTROLIER

FILE NO. E-1

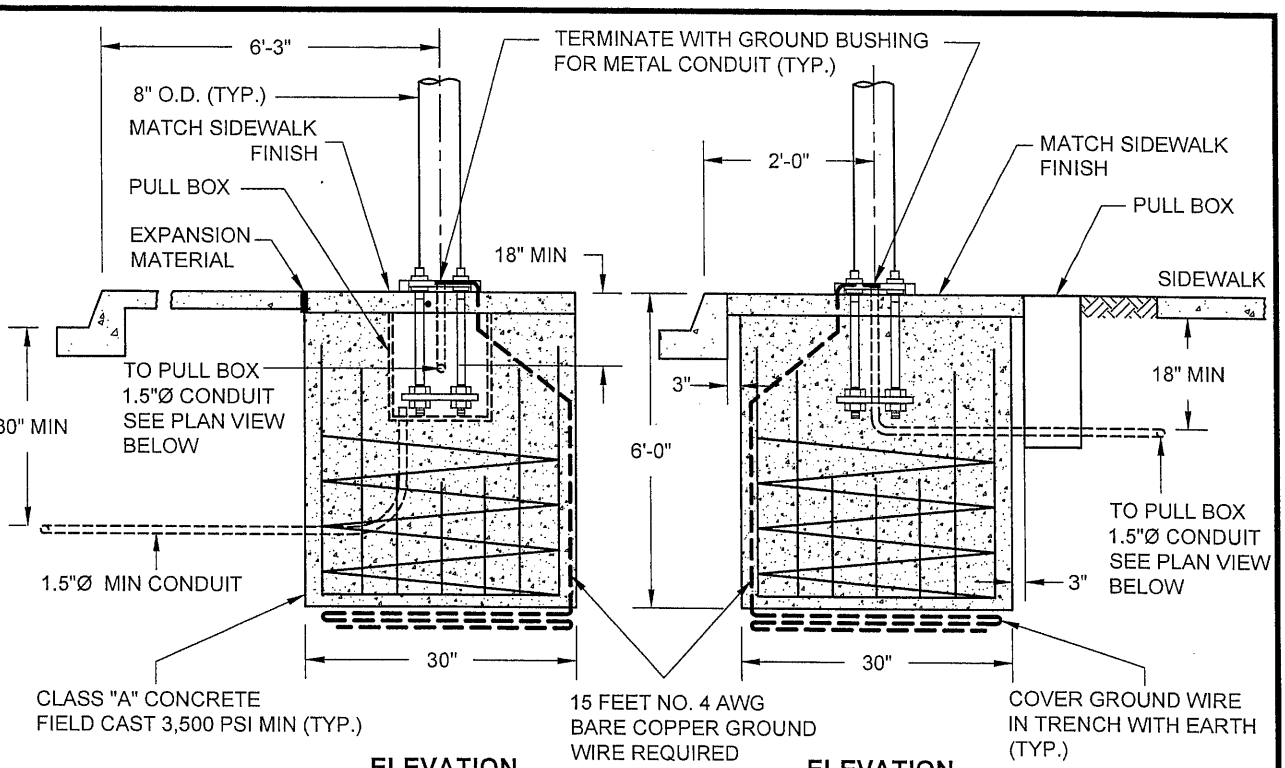

ELEVATION
MONOLITHIC SIDEWALK

ELEVATION
DETACHED SIDEWALK

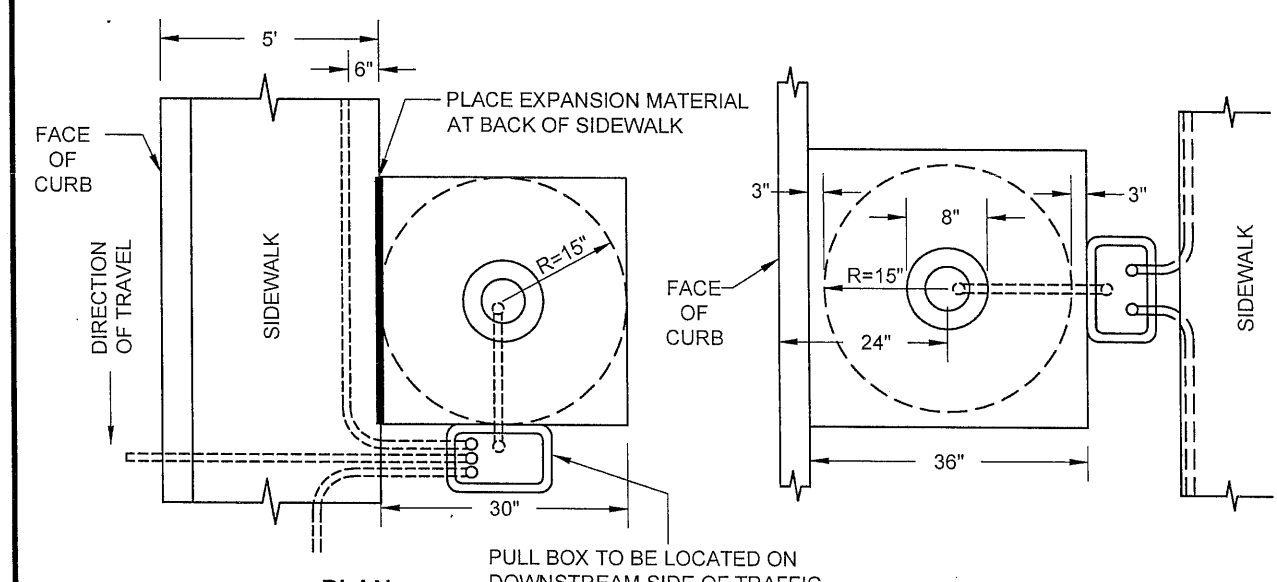

PLAN
MONOLITHIC SIDEWALK

PLAN
DETACHED SIDEWALK

NOTE: FOR MONOLITHIC SIDEWALK WIDER THAN 6 FEET (MEASURED FROM BACK OF CURB), BASE LOCATION SHALL FOLLOW DETACHED SIDEWALK DETAIL.

Revision	Date	Approved
Drawn: TE	Date: 08-23-2016	
Checked: AB	Scale: NTS	

APPROVED BY: Jacqueline Cd Solomon

9/2/2016 — DATE
12-31-2017 — EXP.
57093 — R.C.E. NO.

REGISTERED PROFESSIONAL ENGINEER JACQUELINE ANDREWS SOLOMON No. 57093 CIVIL STATE OF CALIFORNIA

CITY OF MOUNTAIN VIEW
PUBLIC WORKS DEPARTMENT
STANDARD DETAIL

STANDARD POLE BASE
(SHEET 1 OF 3)

FILE NO. E-2

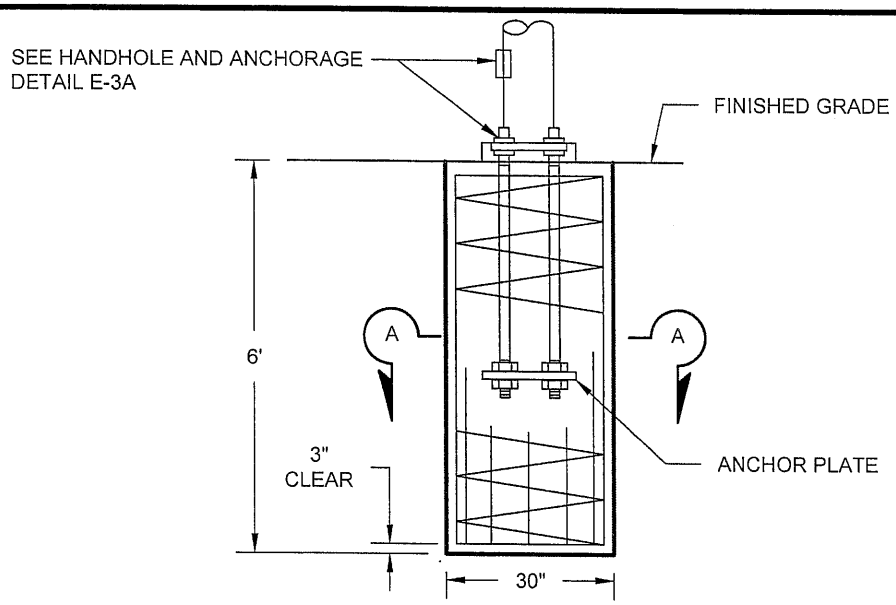

ELEVATION

FOR POLES TO BE INSTALLED ON EXISTING FOUNDATION:

VERIFY BOLT CIRCLES, ANCHOR BOLT SIZES, AND DEPENDENT DIMENSIONS FOR POLES TO BE INSTALLED ON EXISTING FOUNDATIONS BEFORE FABRICATING THE POLES.

CAST-IN-DRILLED-HOLE (CIDH) PILE FOUNDATION, REINFORCED PILE

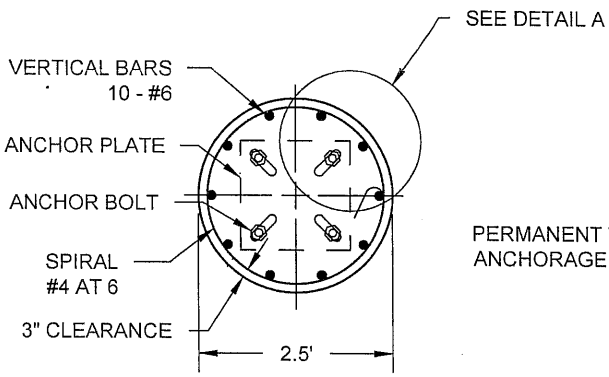

SECTION A-A

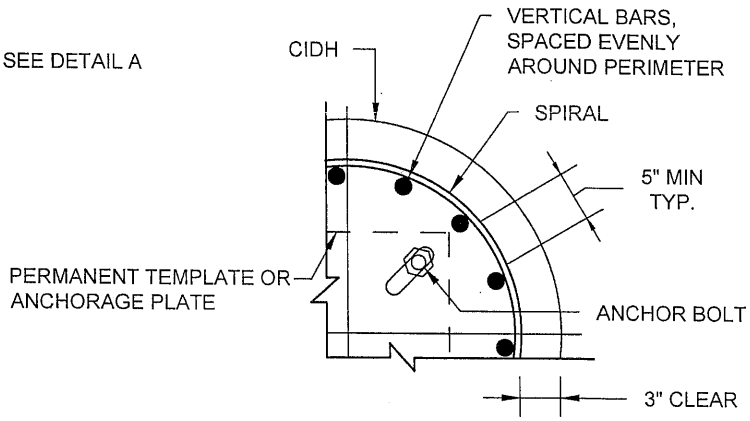

DETAIL A

Revision	Date	Approved
Drawn: TE	Date: 08-23-2016	
Checked: AB	Scale: NTS	

APPROVED BY: Jacqueline A Solomon

9/2/2016 — DATE

12-31-2017 — EXP.

57093 — R.C.E. NO.

REGISTERED PROFESSIONAL ENGINEER — JACQUELINE ANDREWS SOLOMON — No. 57093 — CIVIL — STATE OF CALIFORNIA

CITY OF MOUNTAIN VIEW
PUBLIC WORKS DEPARTMENT
STANDARD DETAIL

STANDARD POLE BASE

(SHEET 2 OF 3)

FILE NO. E-3

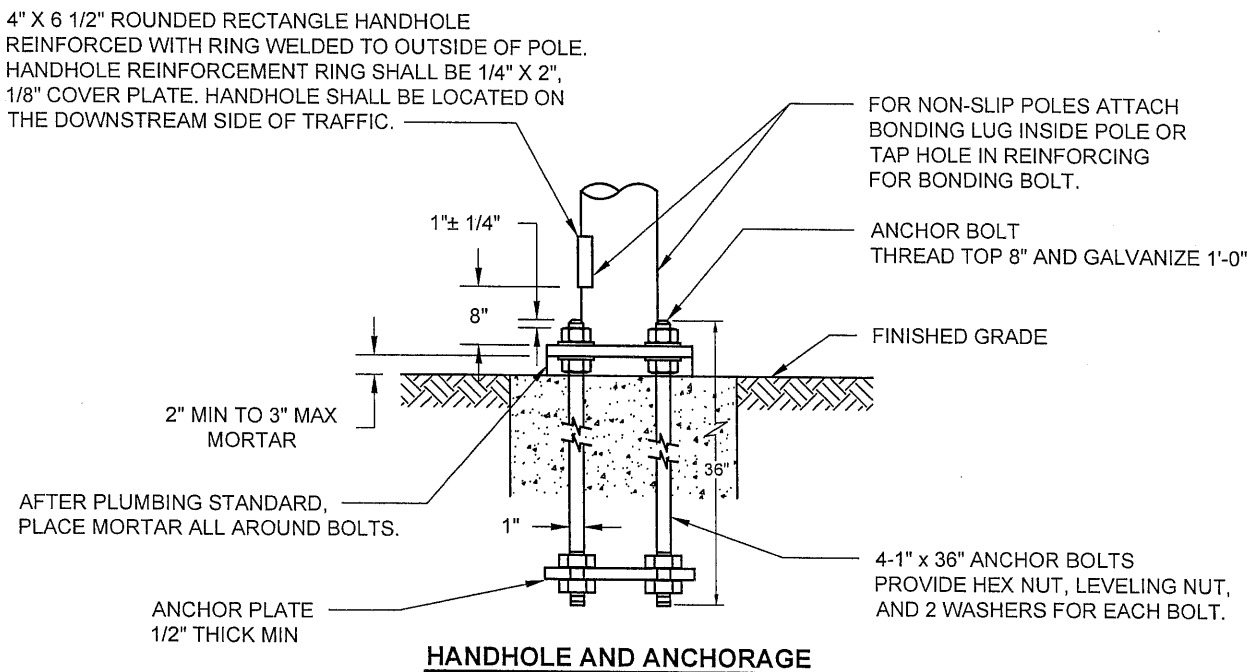

HANDHOLE AND ANCHORAGE

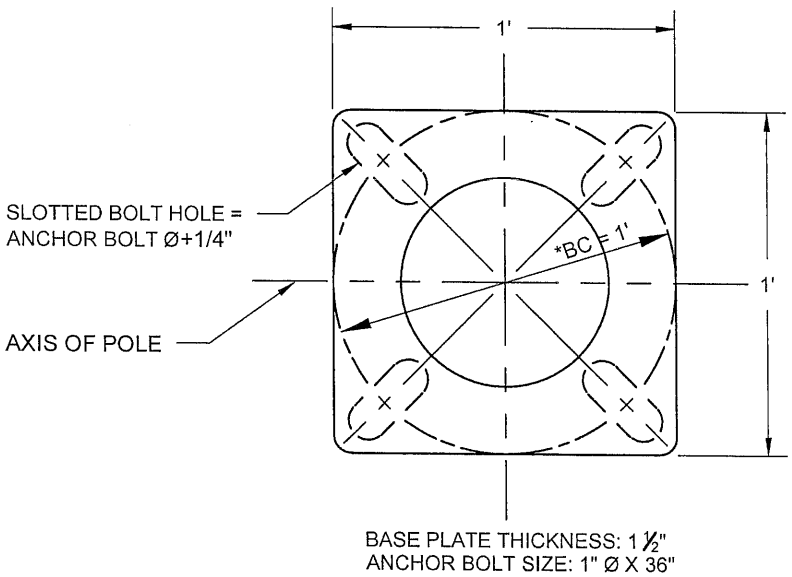

SLOTTED BASE PLATE

*BC = BOLT CIRCLE

Revision	Date	Approved
Drawn: TE	Date: 08-23-2016	
Checked: AB	Scale: NTS	

APPROVED BY: Jacqueline A. O'Connor

9/2/2016 — DATE

12-31-2017 — EXP.

57093 — R.C.E. NO.

REGISTERED PROFESSIONAL ENGINEER — JACQUELINE ANDREWS O'CONNOR — No. 57093 — CIVIL — STATE OF CALIFORNIA

CITY OF MOUNTAIN VIEW
PUBLIC WORKS DEPARTMENT
STANDARD DETAIL

STANDARD POLE BASE

(SHEET 3 OF 3)

FILE NO. E-3A

PULL BOX	CHRISTY No.	BOX		COVER				
		A	B	C	D	E	F	G
No. 3-1/2	N9	19-3/4"	14-1/4"	15-1/4"	10"	1-3/4"		
No. 5	N16	25-1/4"	15-3/4"	20-5/8"	10-1/2"	2"	2-1/2"	1-3/4"

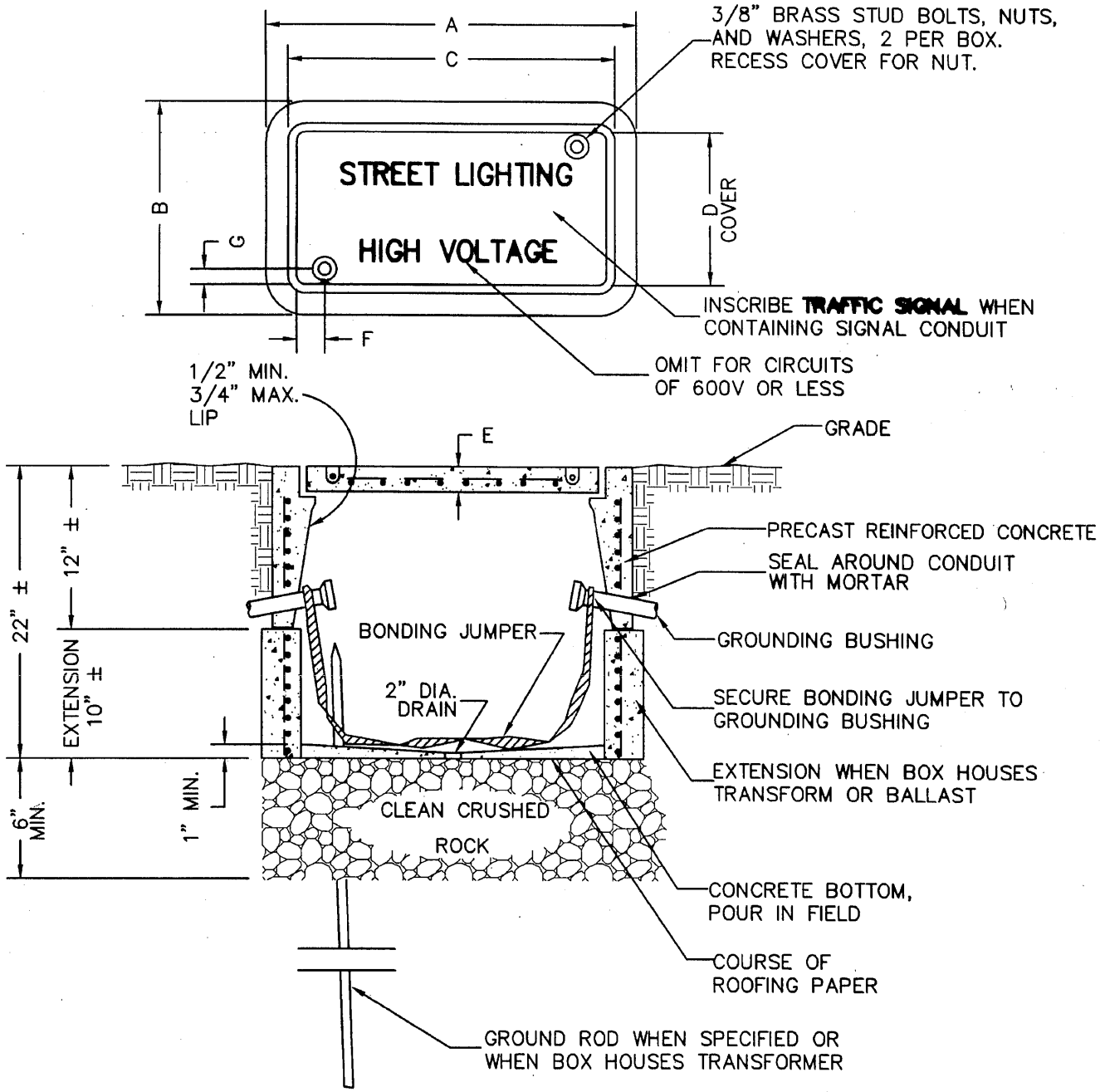

NOTE:

No. 3-1/2 & 5 PULL BOX WITH HOLD-DOWN BOLTS OR APPROVED EQUAL

Revision	Date	Approved
Drawn : QT	Date : 05-07-99	
Checked : RK	Scale : NTS	

APPROVED BY

ASSISTANT PUBLIC WORKS DIRECTOR

REGISTERED PROFESSIONAL ENGINEER TIMOTHY Y. TO No. 27089 EXP. 03-31-01 STATE OF CALIFORNIA

06-29-99	03-31-01	27089
DATE	EXP.	R.C.E. NO.

CITY OF MOUNTAIN VIEW
DEPARTMENT OF PUBLIC WORKS
STANDARD DETAIL

STANDARD PULL BOX

FILE NO. E-4

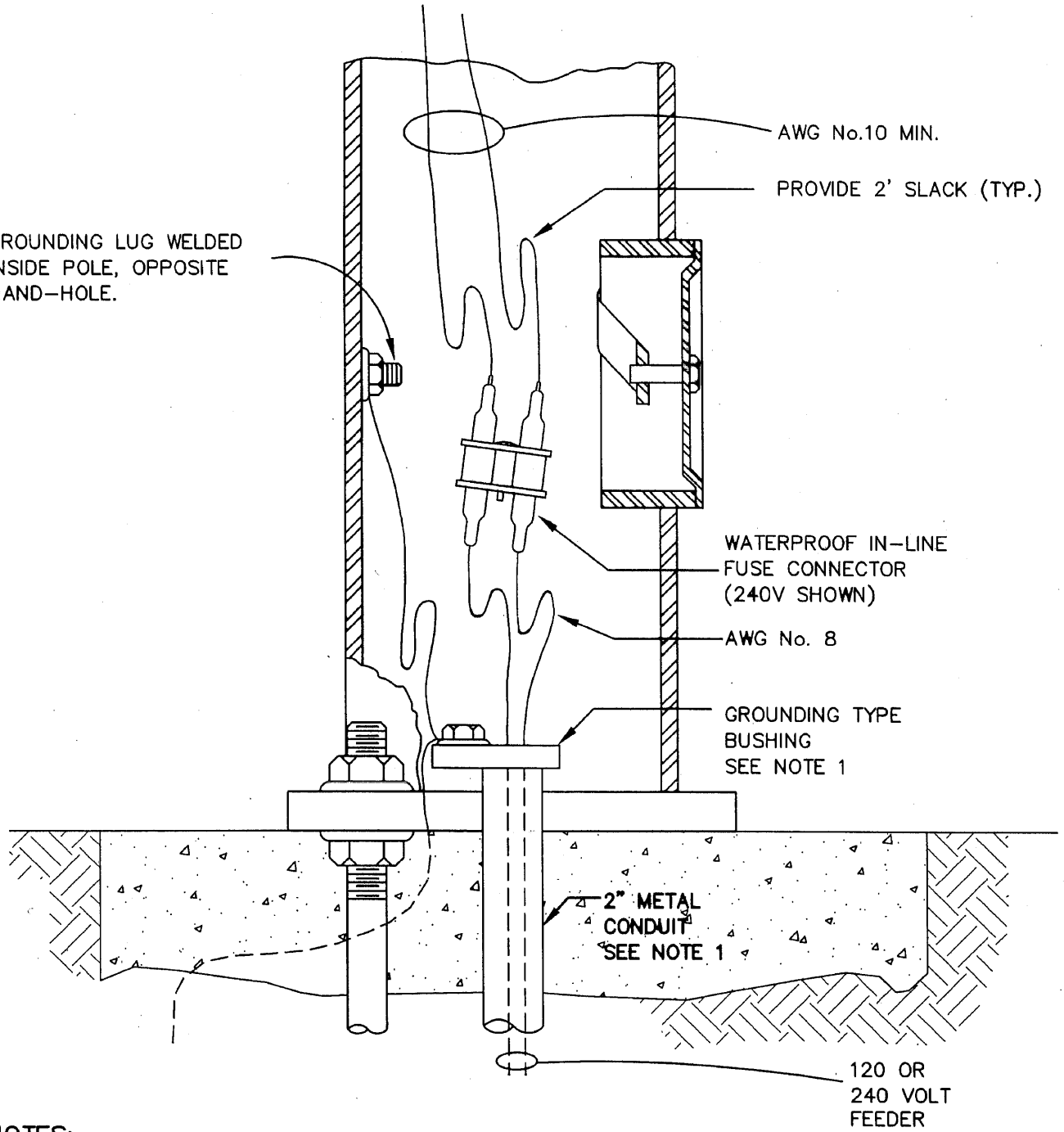

NOTES:

1. GROUNDING TYPE BUSHING IS NOT REQUIRED FOR PLASTIC CONDUIT. FOR PLASTIC CONDUIT, SPLICE GROUND WIRE IN ELECTROLIER TO GROUND WIRE IN CONDUIT.

Revision	Date	Approved
Drawn : QT	Date : 05-04-99	
Checked : RK	Scale : NTS	

APPROVED BY

ASSISTANT PUBLIC WORKS DIRECTOR

06-29-99 DATE | 03-31-01 EXP. | 27089 R.C.E. NO.

REGISTERED PROFESSIONAL ENGINEER TIMOTHY Y. LO No. 27089 EXP. 03-31-01 CIVIL STATE OF CALIFORNIA

CITY OF MOUNTAIN VIEW
DEPARTMENT OF PUBLIC WORKS
STANDARD DETAIL

STREET LIGHT FUSE AND GROUND CONNECTION

FILE NO. E-5

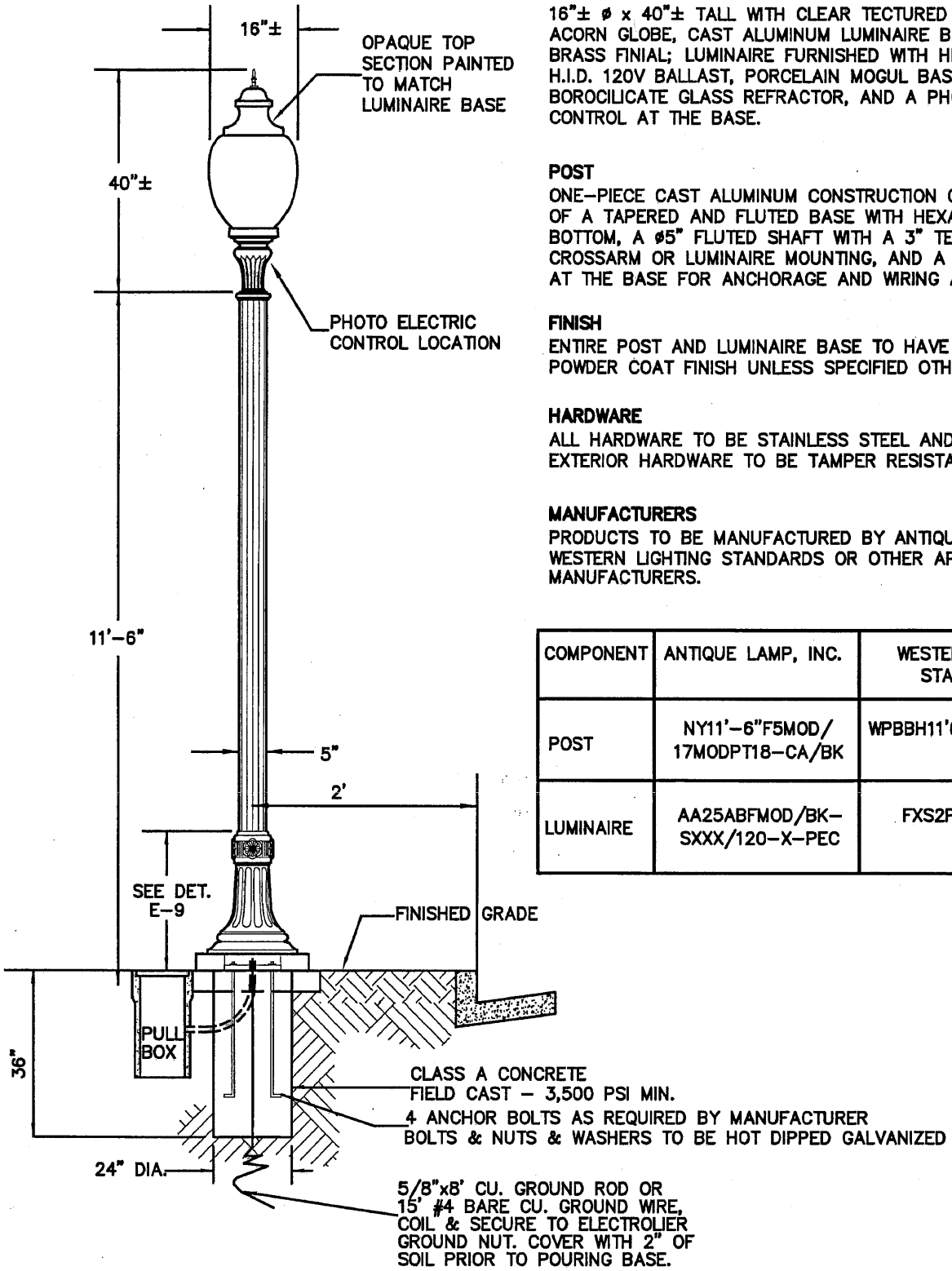

LUMINAIRE
16"± ø x 40"± TALL WITH CLEAR TECTURED ACRYLIC ACORN GLOBE, CAST ALUMINUM LUMINAIRE BASE AND BRASS FINIAL; LUMINAIRE FURNISHED WITH HPS LAMP, H.I.D. 120V BALLAST, PORCELAIN MOGUL BASE SOCKET, BOROCILICATE GLASS REFRACTOR, AND A PHOTOELECTRIC CONTROL AT THE BASE.

POST
ONE-PIECE CAST ALUMINUM CONSTRUCTION CONSISTING OF A TAPERED AND FLUTED BASE WITH HEXAGONAL BOTTOM, A ø5" FLUTED SHAFT WITH A 3" TENON FOR CROSSARM OR LUMINAIRE MOUNTING, AND A HAND-HOLE AT THE BASE FOR ANCHORAGE AND WIRING ACCESS.

FINISH
ENTIRE POST AND LUMINAIRE BASE TO HAVE A "BLACK" POWDER COAT FINISH UNLESS SPECIFIED OTHERWISE.

HARDWARE
ALL HARDWARE TO BE STAINLESS STEEL AND ALL EXTERIOR HARDWARE TO BE TAMPER RESISTANT.

MANUFACTURERS
PRODUCTS TO BE MANUFACTURED BY ANTIQUE LAMPS, INC., WESTERN LIGHTING STANDARDS OR OTHER APPROVED EQUAL MANUFACTURERS.

COMPONENT	ANTIQUE LAMP, INC.	WESTERN LIGHTING STANDARDS
POST	NY11'-6"F5MOD/ 17MODPT18-CA/BK	WPBBH11'6"EF50-COLOR
LUMINAIRE	AA25ABFMOD/BK-SXXX/120-X-PEC	FXS2PT30-COLOR

Revision	Date	Approved
Drawn : QT	Date : 02-25-05	
Checked : RK	Scale : NTS	

APPROVED BY:

ASSISTANT PUBLIC WORKS DIRECTOR

02-25-05 DATE | 03-31-07 EXP. | 27089 R.C.E. NO.

REGISTERED PROFESSIONAL ENGINEER TIMOTHY Y. KO No. 27089 EXP. 03-31-07 STATE OF CALIFORNIA

CITY OF MOUNTAIN VIEW
DEPARTMENT OF PUBLIC WORKS
STANDARD DETAIL

TYPE B STREETLIGHT DETAILS

FILE NO. E-6

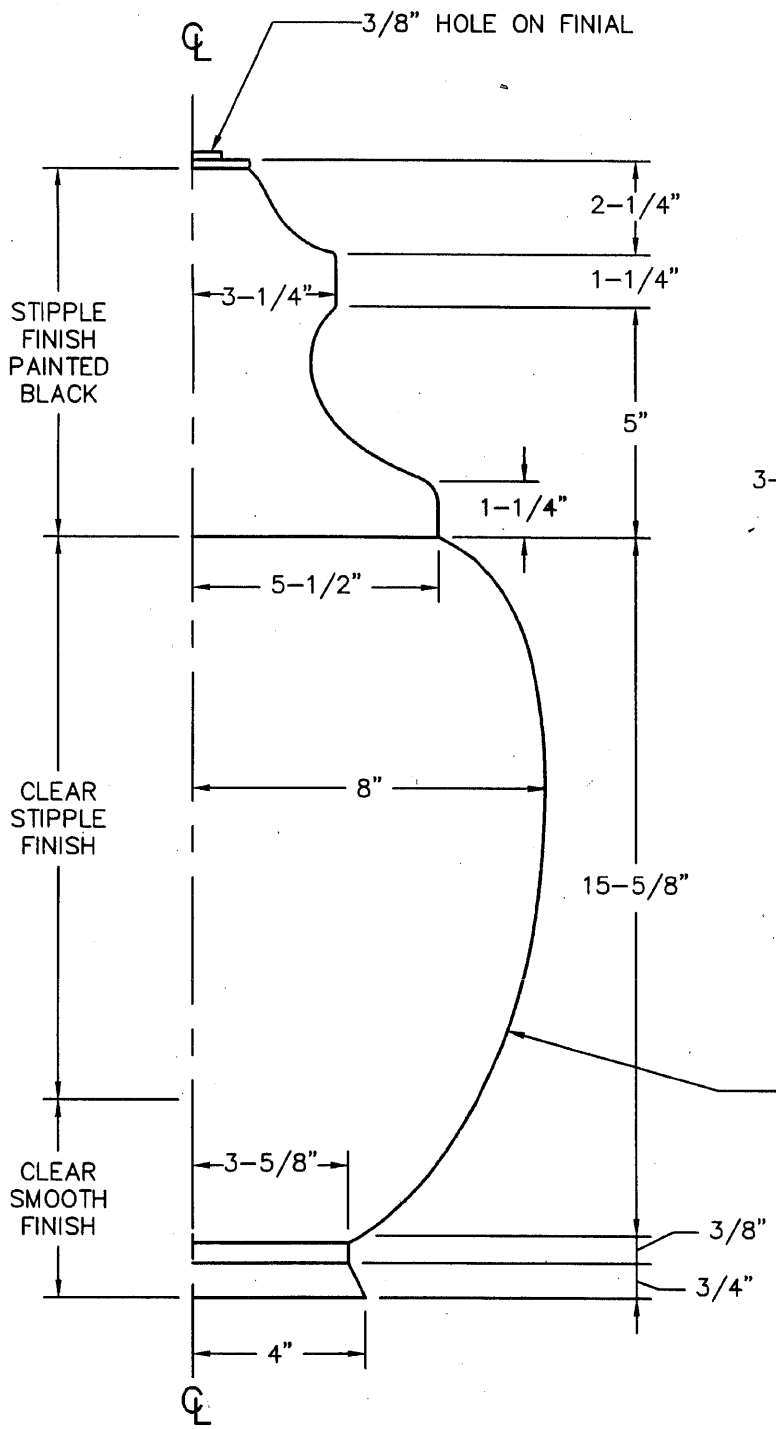

GLOBE DETAIL
(HALF SECTION)

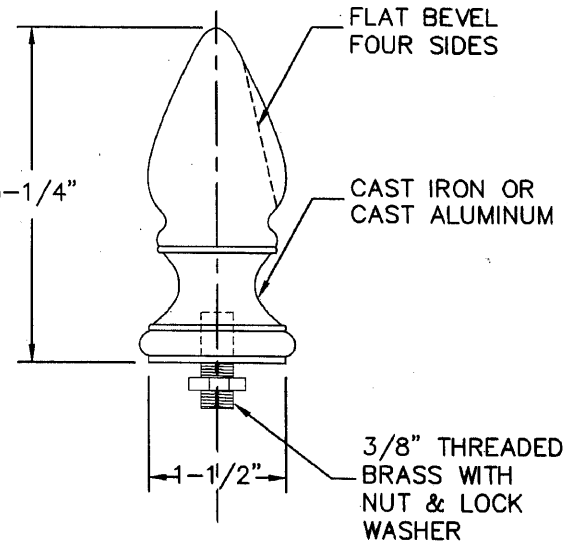

FINIAL DETAIL

Revision	Date	Approved
Drawn : QT	Date : 05-18-99	
Checked : RK	Scale : NTS	
APPROVED BY		

REGISTERED PROFESSIONAL ENGINEER TIMOTHY Y. QUINN No. 27089 EXP. 03-31-01 CIVIL STATE OF CALIFORNIA

ASSISTANT PUBLIC WORKS DIRECTOR

06-29-99	03-31-01	27089
DATE	EXP.	R.C.E. NO.

CITY OF MOUNTAIN VIEW
DEPARTMENT OF PUBLIC WORKS
STANDARD DETAIL

TYPE "B" STREETLIGHT
GLOBE AND FINIAL DETAILS

FILE NO. E-7

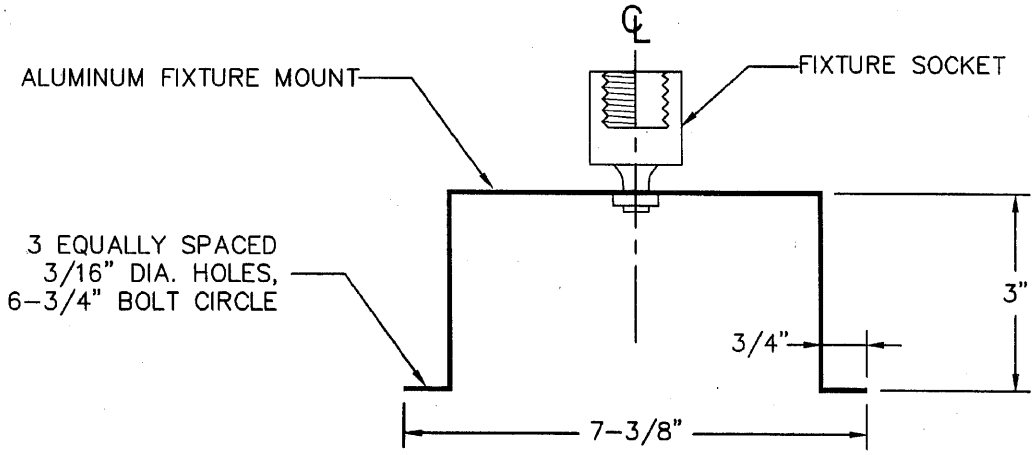

FIXTURE DETAIL

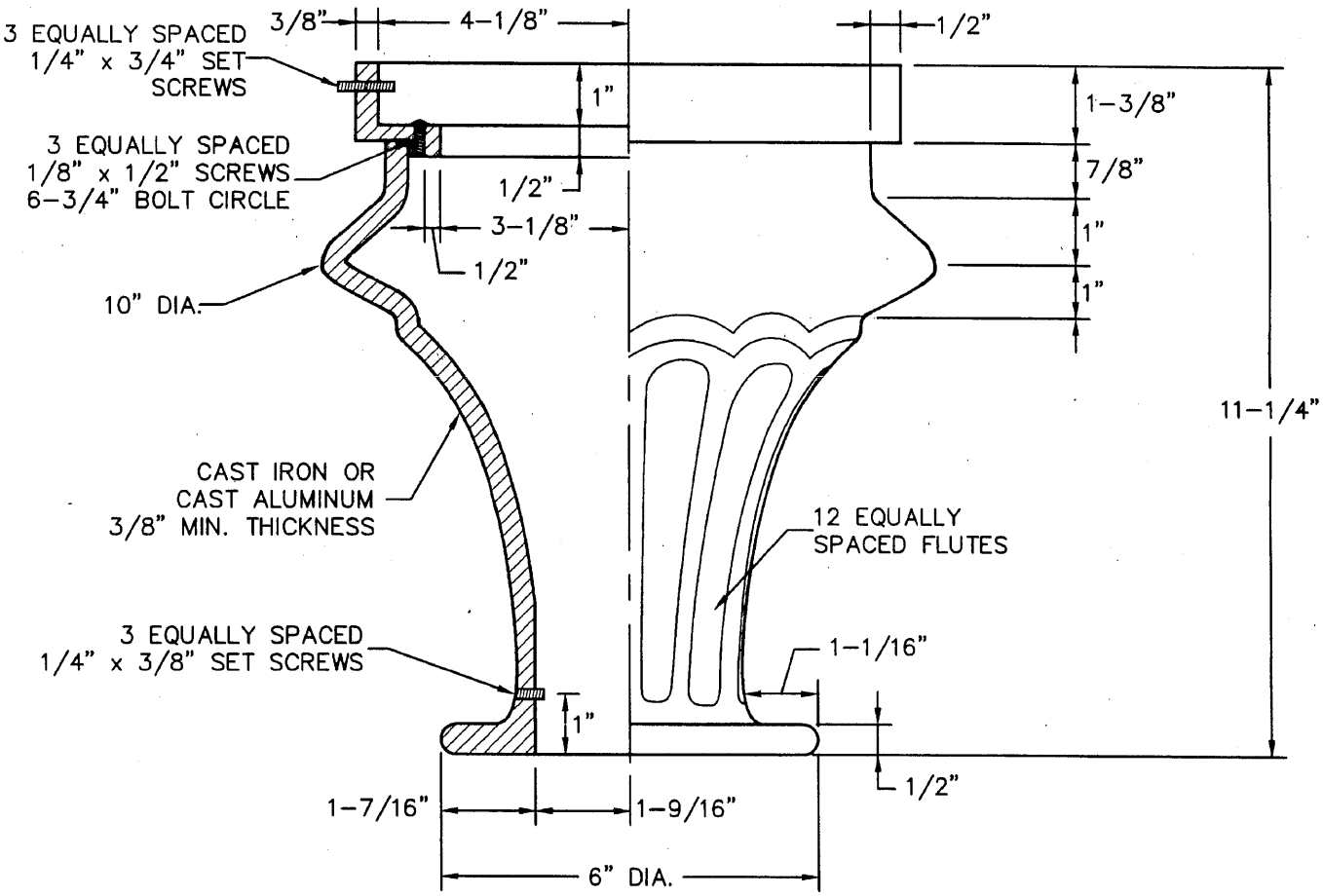

GLOBE HOLDER DETAIL

Revision	Date	Approved
Drawn : QT	Date : 05-18-99	
Checked : RK	Scale : NTS	

APPROVED BY: ASSISTANT PUBLIC WORKS DIRECTOR

06-29-99 DATE | 03-31-01 EXP. | 27089 R.C.E. NO.

REGISTERED PROFESSIONAL ENGINEER TIMOTHY Y. OU No. 27089 EXP. 03-31-01 CIVIL STATE OF CALIFORNIA

CITY OF MOUNTAIN VIEW
DEPARTMENT OF PUBLIC WORKS
STANDARD DETAIL

TYPE "B" STREETLIGHT
FIXTURE & GLOBE HOLDER DETAILS

FILE NO. E-8

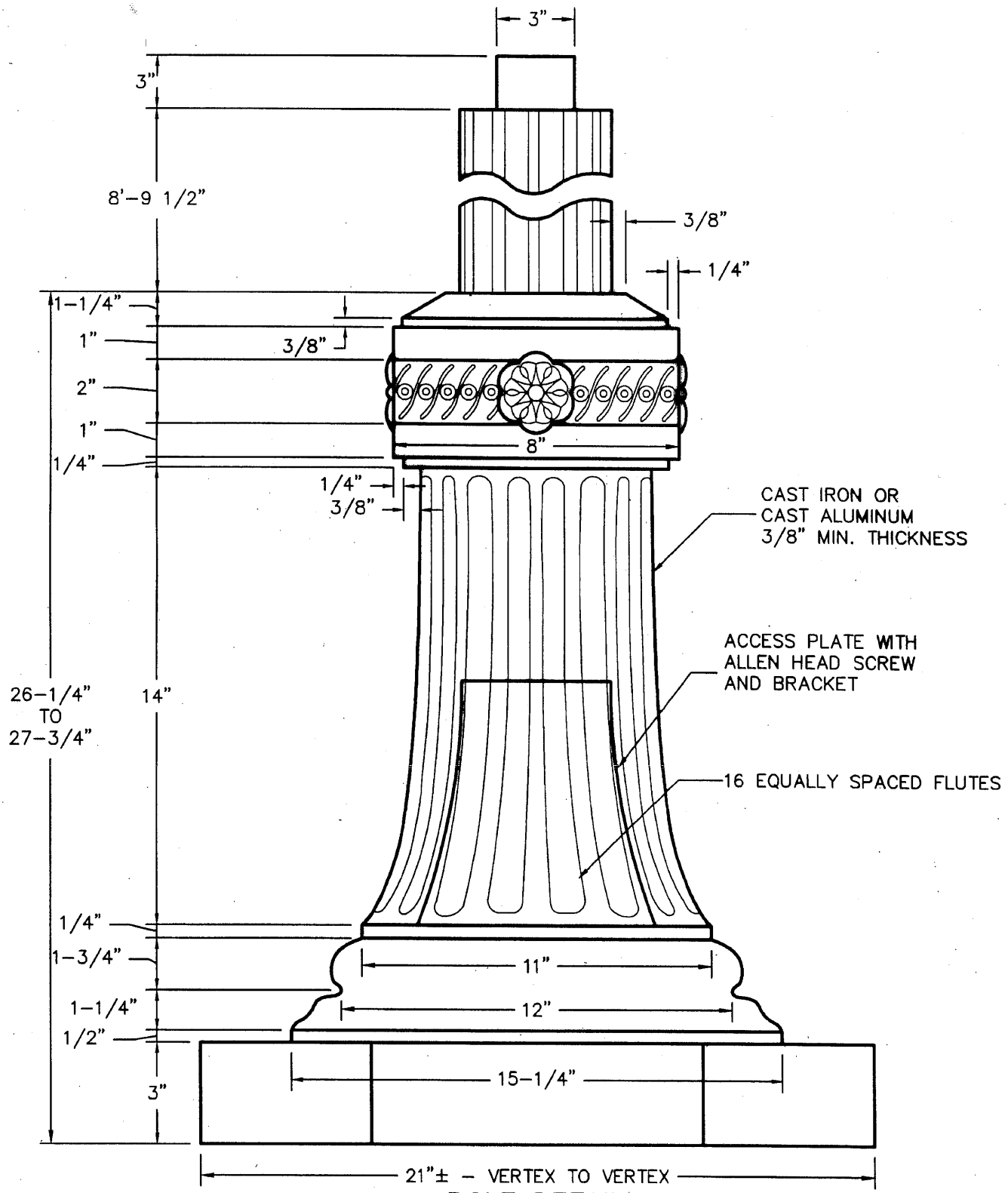

POLE DETAIL

Revision	Date	Approved
Drawn : QT	Date : 05-10-99	
Checked : RK	Scale : NTS	

APPROVED BY

ASSISTANT PUBLIC WORKS DIRECTOR

REGISTERED PROFESSIONAL ENGINEER
TIMOTHY Y. TO
No. 27089
EXP. 03-31-01
CIVIL
STATE OF CALIFORNIA

06-29-99	03-31-01	27089
DATE	EXP.	R.C.E. NO.

CITY OF MOUNTAIN VIEW
DEPARTMENT OF PUBLIC WORKS
STANDARD DETAIL

TYPE "B" STREETLIGHT
POLE DETAILS

FILE NO. E-9

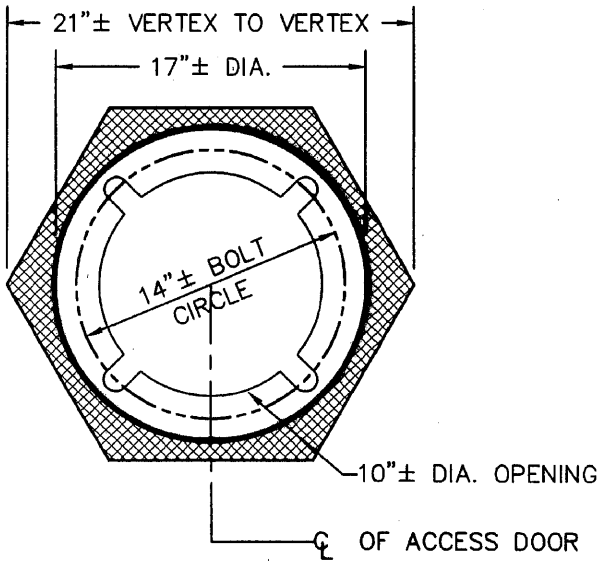

BASE DETAIL

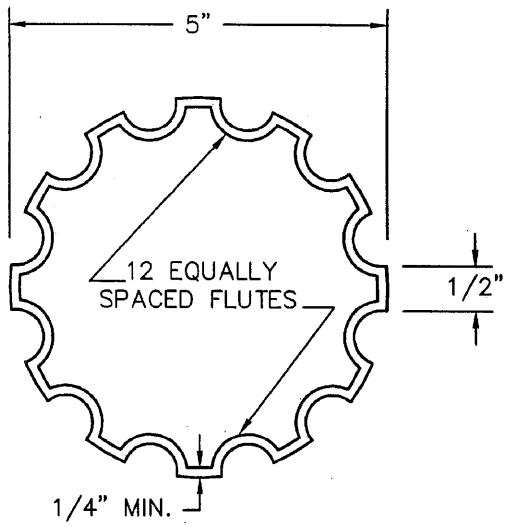

5" DIA. COLUMN DETAIL

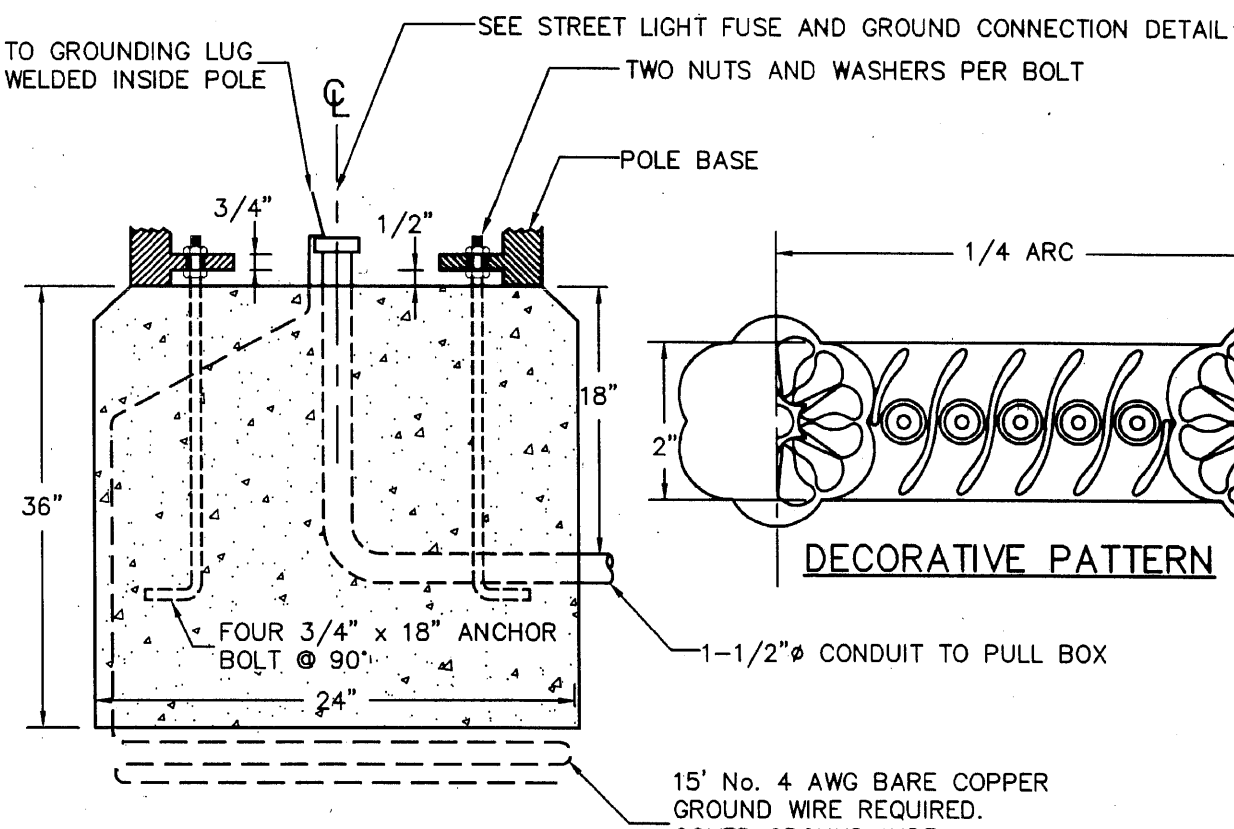

PCC FOOTING DETAIL

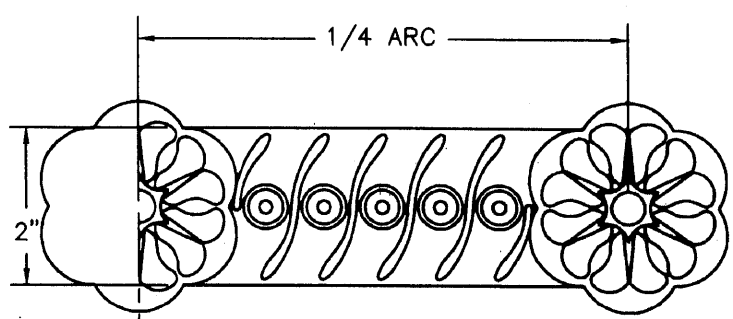

DECORATIVE PATTERN

Revision	Date	Approved
Drawn : QT	Date : 05-10-99	
Checked : RK	Scale : NTS	

APPROVED BY

REGISTERED PROFESSIONAL ENGINEER
TIMOTHY Y. TO
No. 27089
EXP. 03-31-01
CIVIL
STATE OF CALIFORNIA

ASSISTANT PUBLIC WORKS DIRECTOR

06-29-99	03-31-01	27089
DATE	EXP.	R.C.E. NO.

CITY OF MOUNTAIN VIEW
DEPARTMENT OF PUBLIC WORKS
STANDARD DETAIL

TYPE "B" STREETLIGHT
MISCELLANEOUS DETAILS

FILE NO. E-10