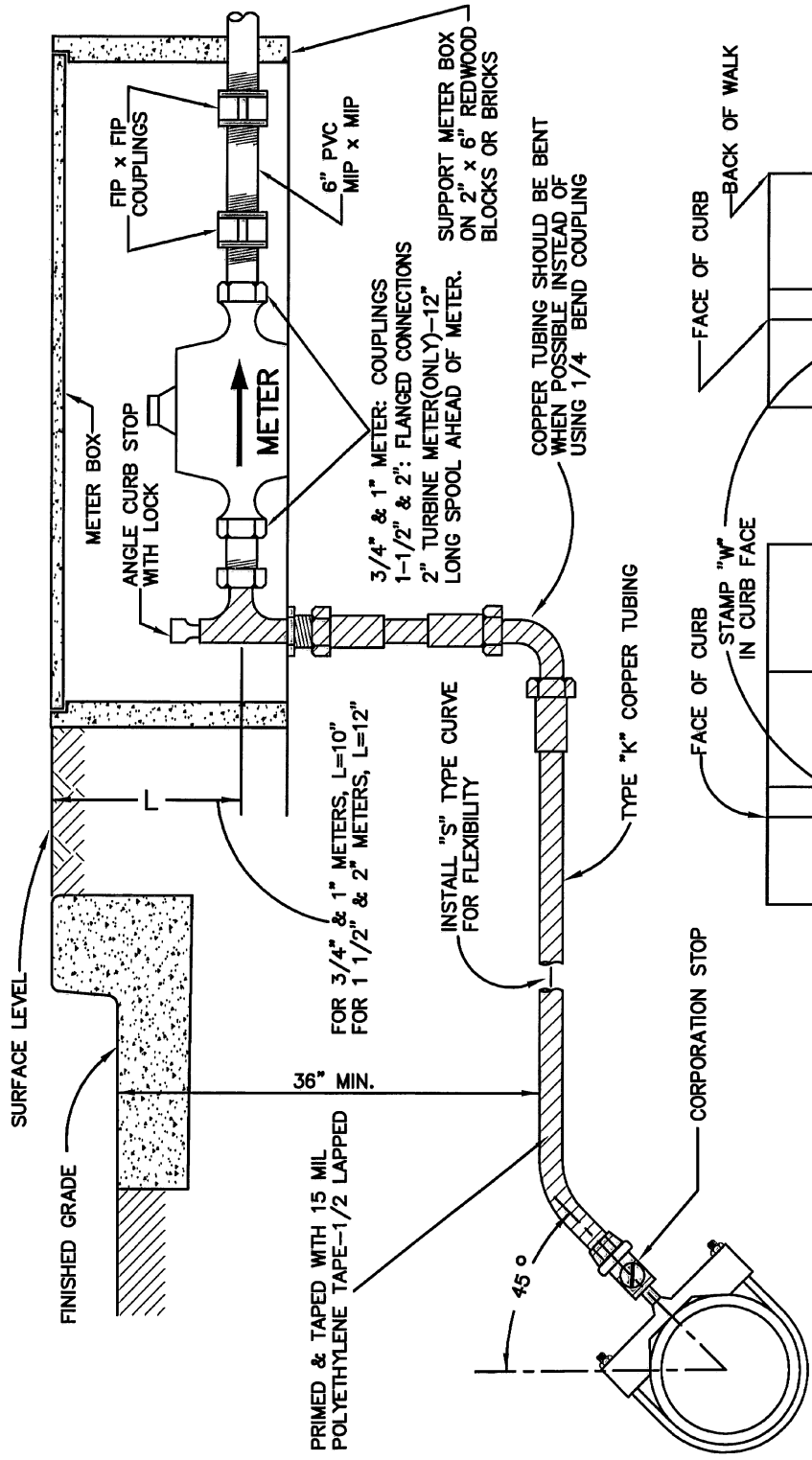

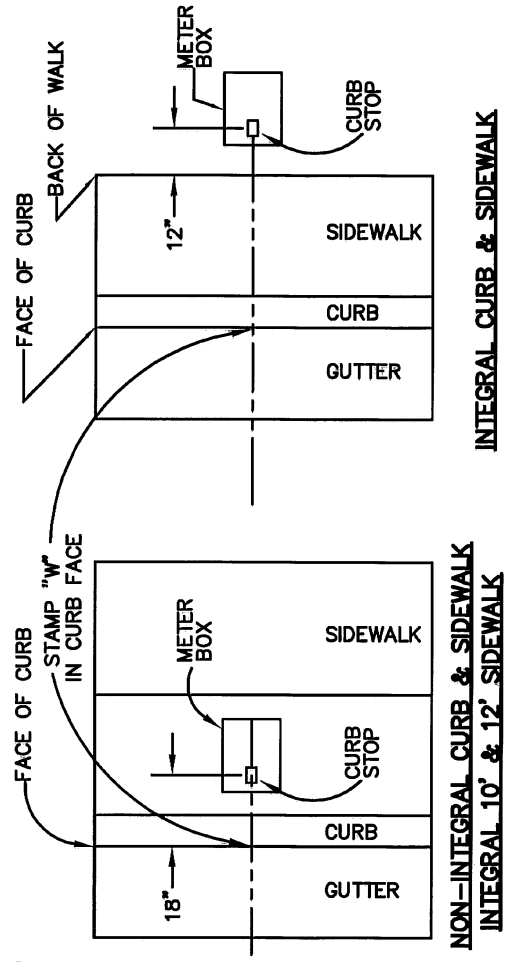

LOCATION PLAN

MAIN TYPE	SERVICE CONNECTION TYPE
D.I.P. & C.I.P.	STAINLESS STEEL FULL CIRCLE CLAMP WITH THREADED CORPORATION STOP TO BE USED ON ALL 1" AND 2" SERVICES. 7-1/2" WIDE BAND FOR 1" TAPS 12-1/2" WIDE BAND FOR 2" TAPS
A.C.P.	DOUBLE STRAP SERVICE CLAMP WITH THREADED CORPORATION STOP.
P.V.C.	SERVICE SADDLES FORD S-90 OR APPROVED BY ENGINEER.

Revision	Date	Approved

Drawn : QT Date : 02-25-05

Checked : RK Scale : NTS

APPROVED BY:

ASSISTANT PUBLIC WORKS DIRECTOR

02-25-05 DATE | 03-31-07 EXP. | 27089 R.C.E. NO.

REGISTERED PROFESSIONAL ENGINEER TIMOTHY Y. LEE No. 27089 EXP. 03-31-07 STATE OF CALIFORNIA

CITY OF MOUNTAIN VIEW
DEPARTMENT OF PUBLIC WORKS
STANDARD DETAIL

STANDARD 1" AND 2" WATER SERVICES WITH 3/4", 1", 1-1/2", AND 2" WATER METERS

FILE NO. D-1

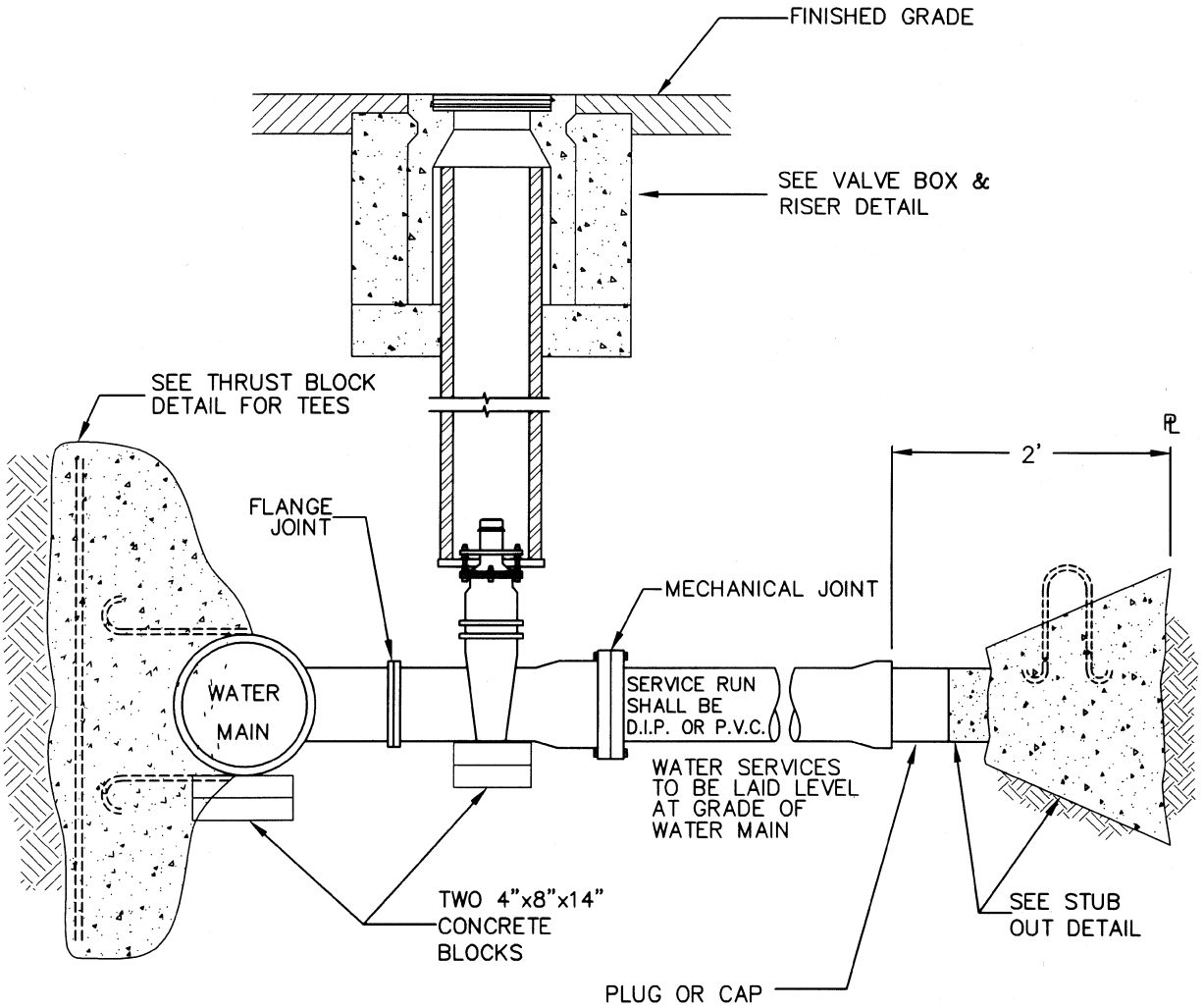

GATE VALVE THRUST BLOCK ANCHOR NOT REQUIRED

Revision	Date	Approved
Drawn : QT	Date : 05-20-99	
Checked : RK	Scale : NTS	

APPROVED BY:

ASSISTANT PUBLIC WORKS DIRECTOR

06-29-99 DATE | 03-31-01 EXP. | 27089 R.C.E. NO.

REGISTERED PROFESSIONAL ENGINEER TIMOTHY Y. PAN No. 27089 EXP. 03-31-01 STATE OF CALIFORNIA

CITY OF MOUNTAIN VIEW
DEPARTMENT OF PUBLIC WORKS
STANDARD DETAIL

STANDARD
WATER AND FIRE SERVICES LARGER THAN 2"

FILE NO. D-2

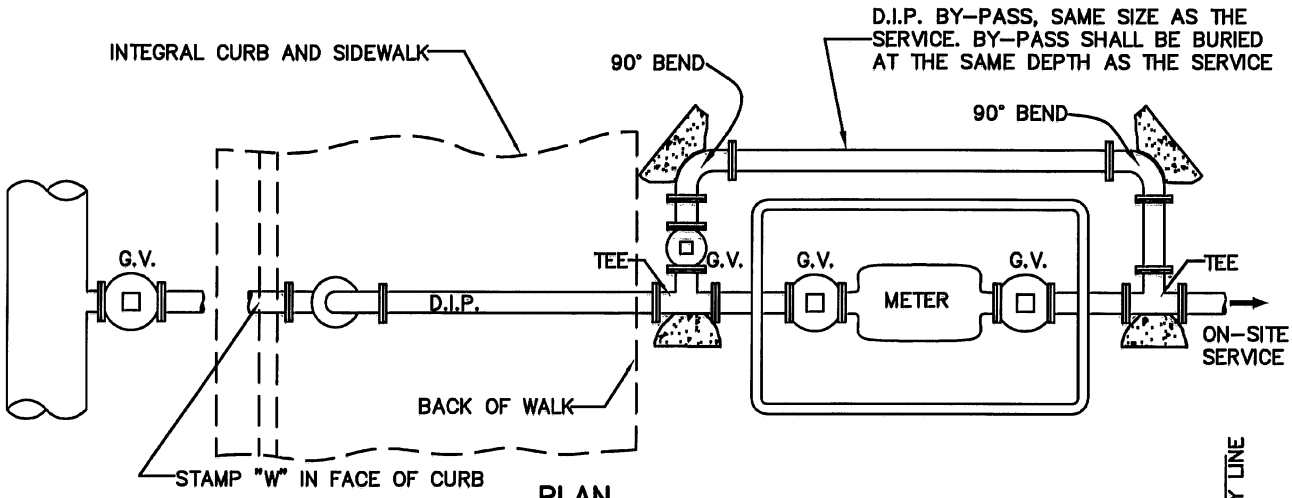

PLAN

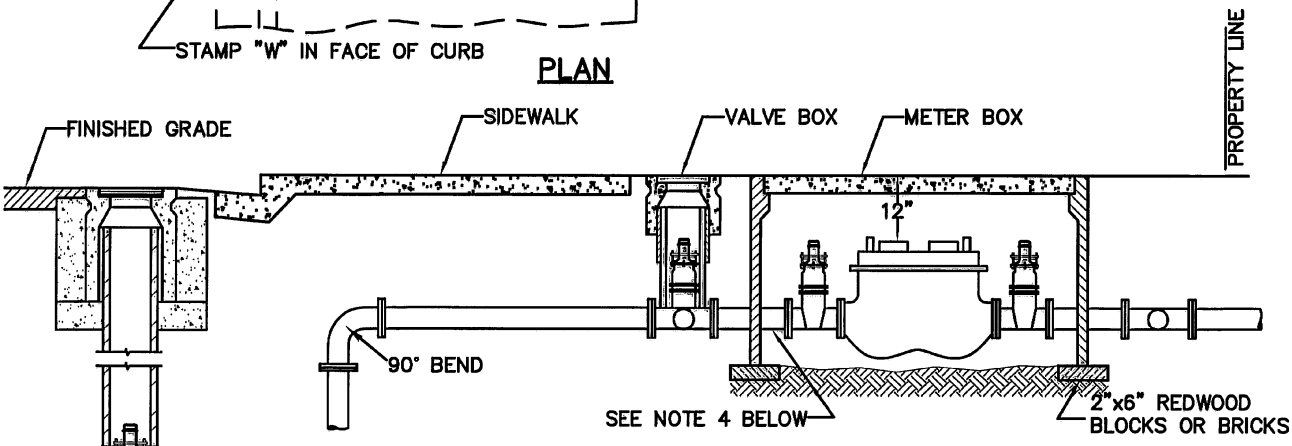

ELEVATION

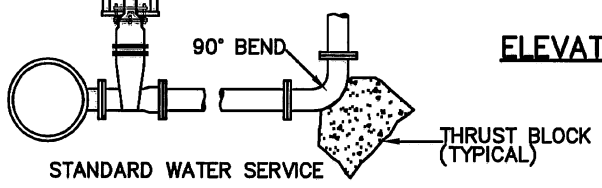

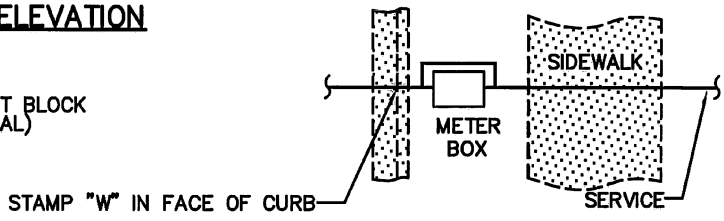

LOCATION PLAN DETAIL

NON-INTEGRAL CURB AND SIDEWALK
INTEGRAL CURB & SIDEWALK WIDER THAN 10'

NOTES:

1. THE METER AND METER BOX MAY BE ROTATED 90° TO COMPENSATE FOR SPACE REQUIREMENTS. TRIM VALVES ARE REQUIRED ON LOWER SIDE OF METER.
2. ALL JOINTS SHALL BE FLANGED TYPE, OR MECHANICAL TYPE JOINTS WITH RETAINER GLANDS. COAT BOLTS, NUTS AND RETAINER GLANDS WITH MASTIC COATING SOLUTION.
3. WRAP ALL METER PIPE, FITTINGS AND VALVES WITH 8 MIL POLYETHYLENE, EXCEPT FOR PIPING IN METER BOX.
4. WHEN USING A TURBINE METER, INSTALL STRAINER UPSTREAM OF METER.

Revision	Date	Approved
Drawn : QT	Date : 02-25-05	
Checked : RK	Scale : NTS	

APPROVED BY:

ASSISTANT PUBLIC WORKS DIRECTOR

02-25-05 DATE | 03-31A07 EXP. | 27089 R.C.E. NO.

REGISTERED PROFESSIONAL ENGINEER TIMOTHY Y. TAM No. 27089 EXP. 03-31-07 STATE OF CALIFORNIA

CITY OF MOUNTAIN VIEW
DEPARTMENT OF PUBLIC WORKS
STANDARD DETAIL

3" OR LARGER WATER METER INSTALLATION TURBINE TYPE

FILE NO. D-3

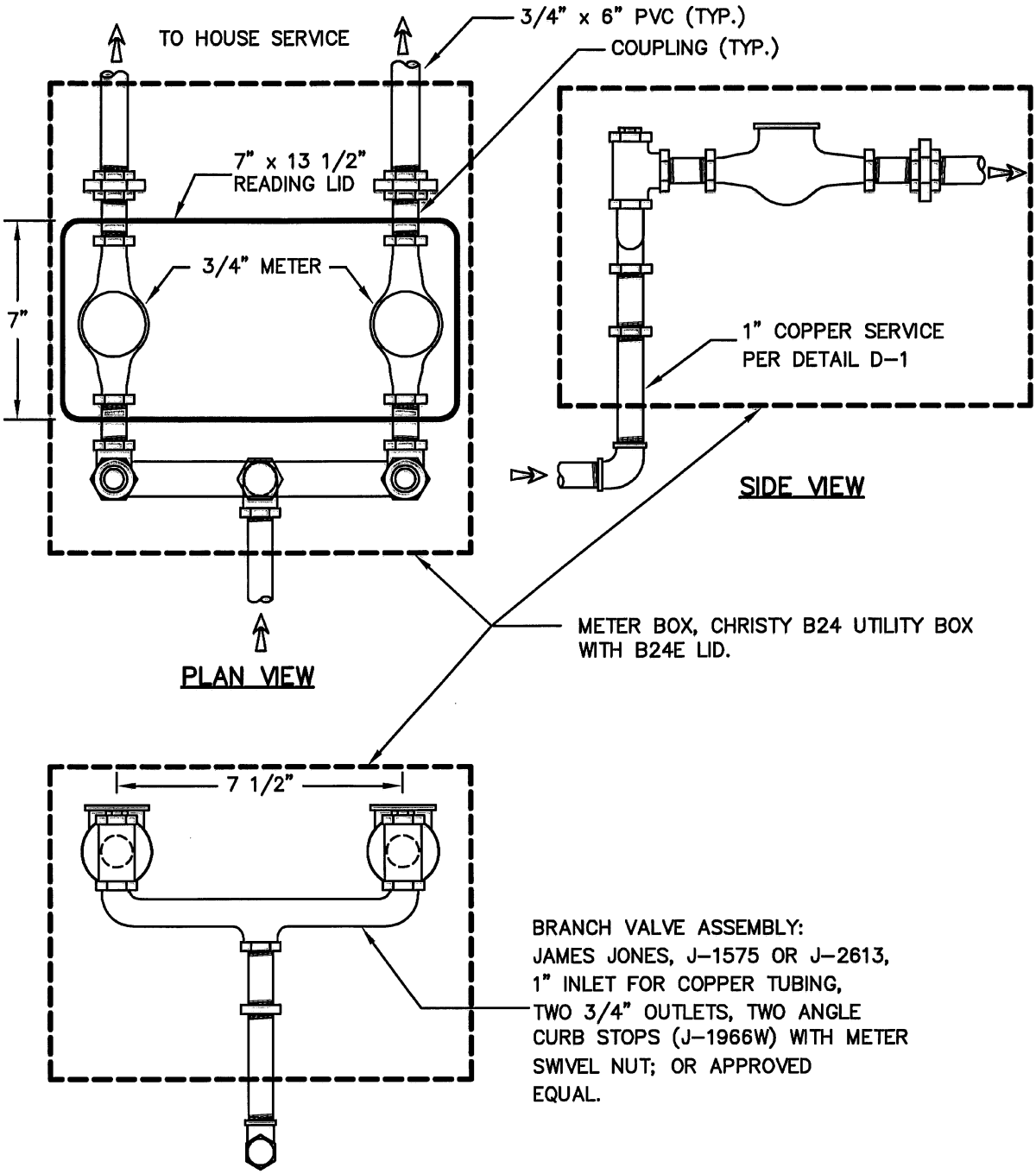

NOTE: THIS DETAIL TO BE USED ONLY FOR SPECIAL APPLICATIONS

Revision	Date	Approved
Drawn : QT	Date : 02-25-05	
Checked : RK	Scale : NTS	

APPROVED BY:

ASSISTANT PUBLIC WORKS DIRECTOR

02-25-05 DATE | 03-31-07 EXP. | 27089 R.C.E. NO.

REGISTERED PROFESSIONAL ENGINEER TIMOTHY Y. KIM No. 27089 EXP. 03-31-07 STATE OF CALIFORNIA

CITY OF MOUNTAIN VIEW
DEPARTMENT OF PUBLIC WORKS
STANDARD DETAIL

DUAL WATER METER INSTALLATION
1" SERVICE TO 3/4" METERS

FILE NO. D-3A

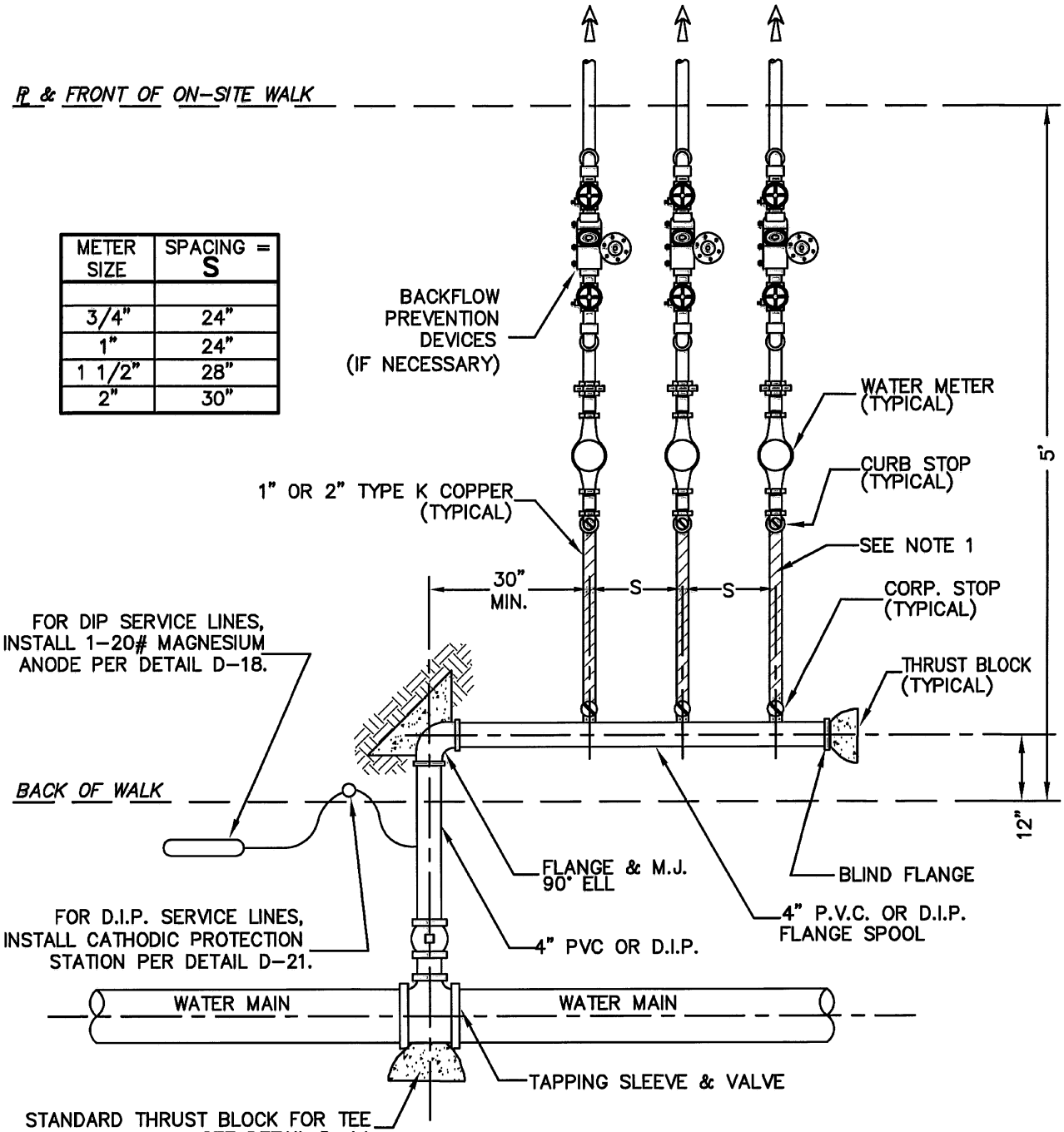

METER SIZE	SPACING = S
3/4"	24"
1"	24"
1 1/2"	28"
2"	30"

NOTES:

1. PRIME & TAPE PIPE WITH 15 MIL POLYETHYLENE TAPE – 1/2 LAPPED (TYPICAL).
2. INSTALL "W" AT FACE OF CURB.

Revision	Date	Approved

Drawn : QT Date : 02-25-05

Checked : RK Scale : NTS

APPROVED BY:

ASSISTANT PUBLIC WORKS DIRECTOR

02-25-05 DATE 03-31-07 EXP. 27089 R.C.E. NO.

REGISTERED PROFESSIONAL ENGINEER TIMOTHY Y. KIM No. 27089 EXP. 03-31-07 STATE OF CALIFORNIA

CITY OF MOUNTAIN VIEW
DEPARTMENT OF PUBLIC WORKS
STANDARD DETAIL

MULTIPLE WATER METER INSTALLATION
4" SERVICE AND MANIFOLD

FILE NO. D-3B

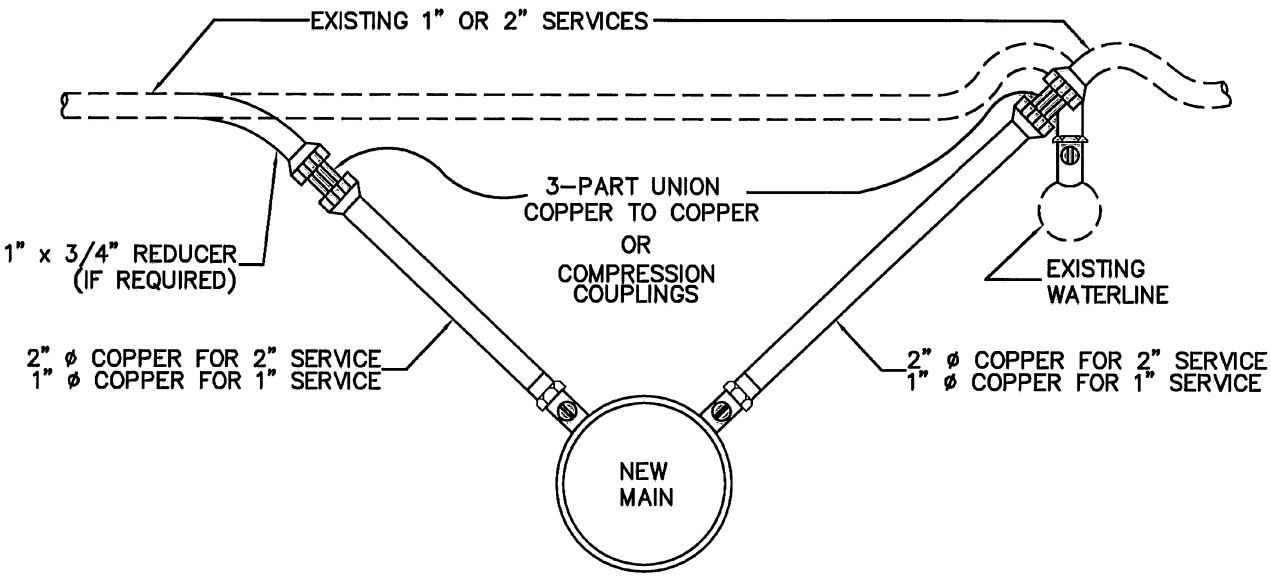

TRANSFER SERVICE DETAIL

Revision	Date	Approved
Drawn : QT	Date : 02-25-05	
Checked : RK	Scale : NTS	

APPROVED BY:

ASSISTANT PUBLIC WORKS DIRECTOR

02-25-05 DATE | 03-31-07 EXP. | 27089 R.C.E. NO.

REGISTERED PROFESSIONAL ENGINEER TIMOTHY Y. NG No. 27089 EXP. 03-31-07 STATE OF CALIFORNIA

CITY OF MOUNTAIN VIEW
DEPARTMENT OF PUBLIC WORKS
STANDARD DETAIL

TRANSFER SERVICE DETAIL

FILE NO. D-4

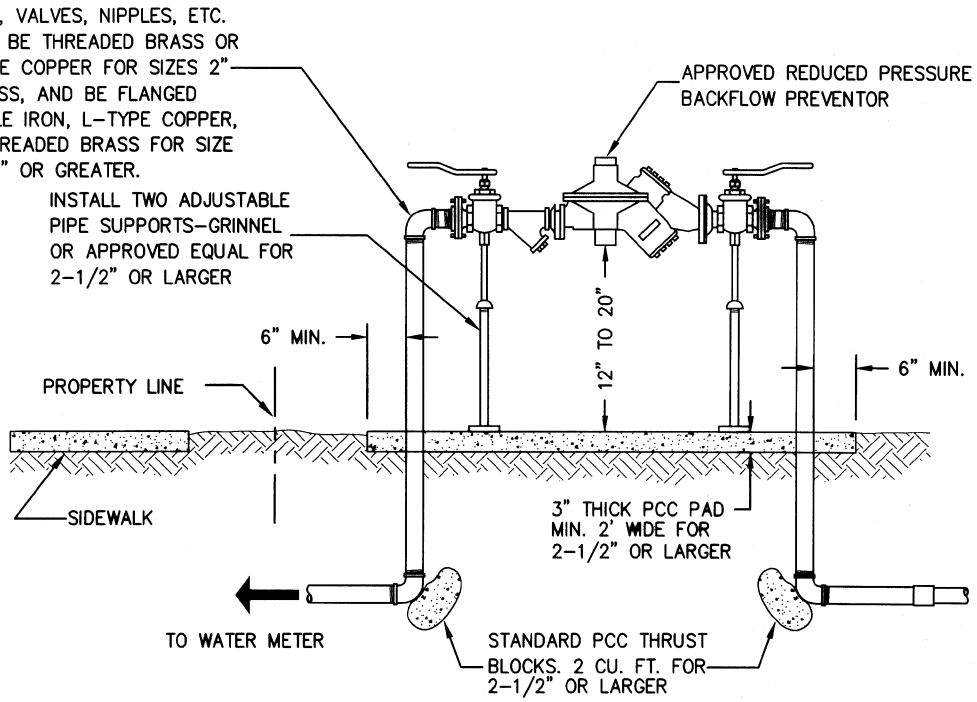

NOTES:

1. REDUCED PRESSURE TYPE BACKFLOW PREVENTION DEVICES SHALL BE REQUIRED FOR ANY USE WHERE TOXIC MATERIALS ARE USED OR WHERE POSITIVE PROTECTION FOR THE PUBLIC WATER SUPPLY IS REQUIRED. TYPICAL APPLICATIONS INCLUDE: HOSPITALS, MEDICAL AND DENTAL LABORATORIES, MORTUARIES, INDUSTRIAL PLANTS, DRY CLEANERS, LANDSCAPE IRRIGATION, OR AS DETERMINED BY THE CITY.

2. APPROVED REDUCED PRESSURE TYPE BACKFLOW PREVENTION DEVICES SHALL BE LISTED IN THE LATEST EDITION OF THE CITY STANDARD PROVISIONS.

3. BACKFLOW PREVENTION DEVICES SHALL BE INSTALLED ADJACENT TO AND ON PROPERTY SIDE OF SIDEWALK WHERE APPLICABLE. THE ASSEMBLY SHALL BE INSTALLED AS CLOSE AS POSSIBLE TO THE WATER METER.

4. ALL DEVICES 3/4" TO 2" WILL HAVE FULL PORT DOMESTIC BALL VALVES, WITH THREADED ENDS. 3" AND LARGER DEVICES WILL HAVE RESILIENT SEATED GATE VALVES, WITH FLANGED ENDS.

5. PRESSURE DIFFERENTIAL VALVE IS TO BE AT LEAST 12" ABOVE GRADE TO A MAXIMUM OF 20".

6. NO CONNECTION BETWEEN THE BACKFLOW PREVENTOR AND WATER METER WILL BE PERMITTED. BACKFLOW PREVENTORS SMALLER THAN 2.5" SHALL BE PLACED DIRECTLY BEHIND THE WATER METERS, UNLESS THERE IS A CONFLICT WITH OTHER UTILITIES, DRIVEWAYS OR SIDEWALKS. BACKFLOW PREVENTORS 2.5" OR LARGER SHALL BE PLACED AS CLOSE TO THE METER AS POSSIBLE, UNLESS AN EXEMPTION IS GRANTED BY THE PUBLIC SERVICES DEPARTMENT. IF AN EXEMPTION IS GRANTED, THE BACK FLOW PREVENTOR SHALL BE SCREENED WITH LANDSCAPING AND THE TRENCHES SHALL BE LEFT OPEN SO THAT THE CITY CAN VERIFY THAT THERE ARE NO CONNECTIONS BETWEEN THE BACKFLOW PREVENTOR AND THE METER. THE CITY RESERVES THE RIGHT TO TEST THE SYSTEM TO ENSURE THAT THESE REQUIREMENTS ARE MET.

7. WHERE A BACKFLOW PREVENTOR IS INSTALLED MORE THAN 8' BEHIND THE WATER OR IRRIGATION METER, THE PIPING BETWEEN THE BACKFLOW PREVENTOR AND THE METER SHALL BE ENCASED IN CONTROLLED DENSITY FILL (CDF).

Revision	Date	Approved
Drawn : QT	Date : 05-20-99	
Checked : RK	Scale : NTS	

APPROVED BY: REGISTERED PROFESSIONAL ENGINEER TIMOTHY Y. QIU No. 27089 EXP. 03-31-01 CIVIL STATE OF CALIFORNIA

ASSISTANT PUBLIC WORKS DIRECTOR

06-29-99	03-31-01	27089
DATE	EXP.	R.C.E. NO.

CITY OF MOUNTAIN VIEW
DEPARTMENT OF PUBLIC WORKS
STANDARD DETAIL

REDUCED PRESSURE BACKFLOW PREVENTOR INSTALLATION

FILE NO. D-5

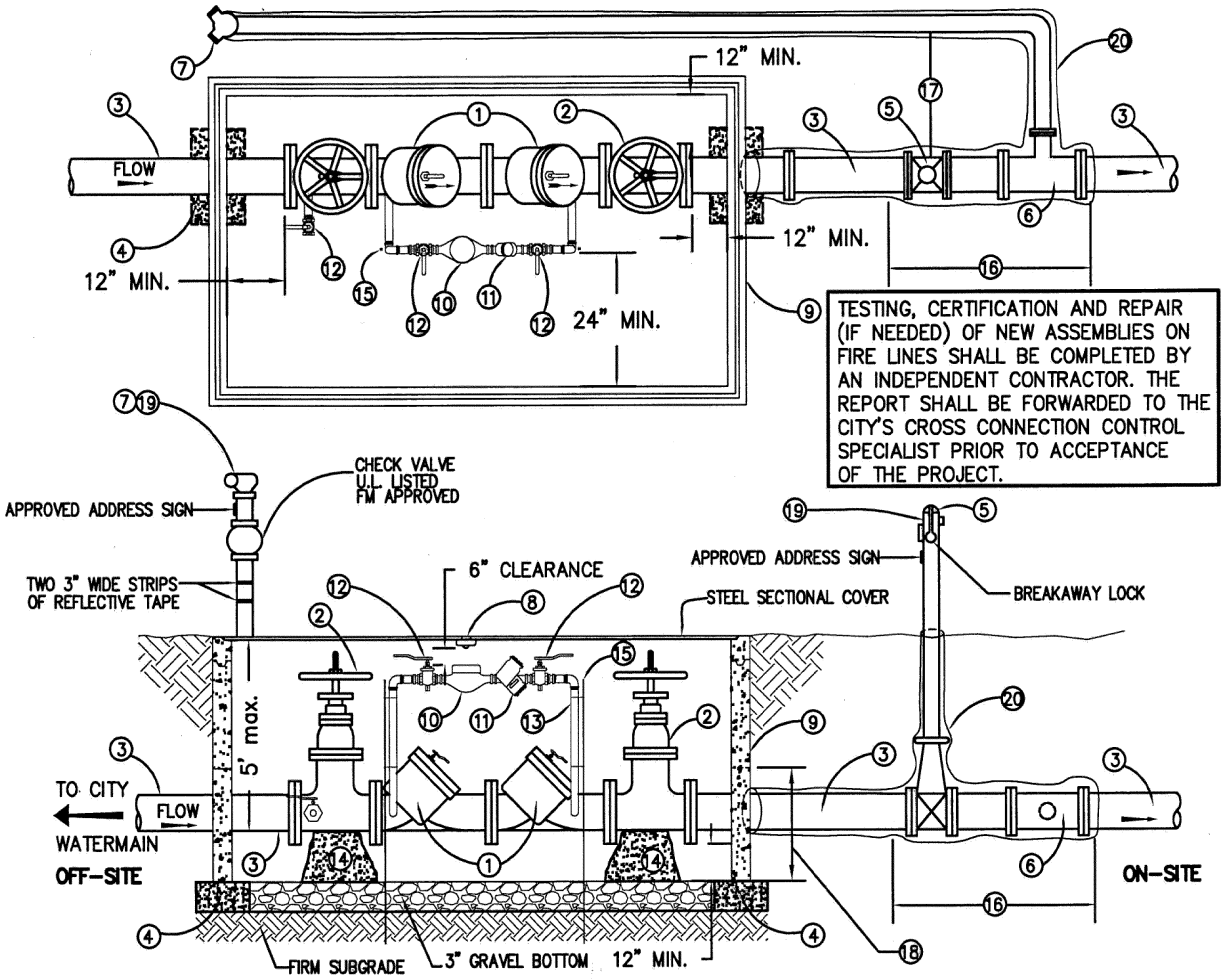

1. DOUBLE CHECK DETECTOR ASSEMBLY (DCDA) PER CITY APPROVED MATERIAL LIST, OR CITY APPROVED EQUAL. APPROVED ASSEMBLY SHALL BE PURCHASED AND INSTALLED AS A WHOLE UNIT WITH GATE VALVES, BY-PASS METER, BY-PASS BACKFLOW PREVENTER, AND BALL VALVES. METER SHALL READ IN CUBIC FEET.
2. OUTSIDE SCREW & YOKE (OS & Y) GATE VALVES – U.L. LISTED (TO BE CHAINED/ LOCKED OPEN).
3. PVC CLASS 150 (MIN.) C-900 OR DIP FOR ON-SITE; PVC CLASS 200 (MIN.) C-900 OR DIP FOR OFF-SITE.
4. BASE SUPPORT: BRICK, CONCRETE OR BASE ROCK COMPACTED TO 95%.
5. POST INDICATOR VALVE (PIV) – U.L. LISTED, 36" ABOVE FINISH GRADE
6. TEE FOR FIRE DEPARTMENT CONNECTION.
7. FIRE DEPARTMENT CONNECTION (FDC),(2-2 1/2" INLETS WITH CLAPPER). FINISHED LOCATION 5' MAX. BEHIND RIGHT-OF-WAY, 3' ABOVE FINISH GRADE.
8. METER "READ HOLE COVER", 7" x 14" – CENTERED OVER METER.
9. PRE-CAST CONCRETE SECTIONAL VAULT PER CITY APPROVED MATERIAL LIST SHALL MAINTAIN MINIMUM CLEARANCES.
10. WATER METER AS PROVIDED BY ASSEMBLY MANUFACTURER – SHALL READ IN CUBIC FEET.
11. DOUBLE CHECK VALVE AS PROVIDED BY ASSEMBLY MANUFACTURER.
12. RESILIENT SEAT BALL VALVE AS PROVIDED BY ASSEMBLY MANUFACTURER.
13. 3/4" RED BRASS THREADED NIPPLES (LENGTH VARIES).
14. POUR IN PLACE CONCRETE SUPPORT.
15. 3/4" REBAR SUPPORT, 24" INTO GROUND.
16. FIRE PIT SHALL BE INSTALLED ON THE ADDRESS SIDE OF THE BUILDING UNLESS OTHERWISE APPROVED BY FIRE DEPT. AND PUBLIC WORKS DEPT.
17. MINIMUM 18" CLEARANCE BETWEEN PIV AND FDC.
18. NOTCHED OPENING EACH END OF VAULT CENTERED 21" FROM INSIDE (SIZE VARIES). TOP OF OPENING TO BE CURVED.
19. ALL WEATHER EXPOSED SURFACES TO BE PAINTED RED (TYP.)
20. ALL FERROUS BURIED PIPES TO BE WRAPPED WITH 8-MIL POLYETHYLENE AND SECURED WITH 10-MIL POLY TAPE. ALL NUTS & BOLTS SHALL BE MASTIC COATED.

Revision	Date	Approved

Drawn : QT | Date : 04-15-05

Checked : RK | Scale : NTS

APPROVED BY:

DEPUTY COMMUNITY DEVELOPMENT DIRECTOR

ASSISTANT PUBLIC WORKS DIRECTOR

04-15-05	03-31-07	27089
DATE	EXP.	R.C.E. NO.

REGISTERED PROFESSIONAL ENGINEER TIMOTHY Y. No. 27089 EXP. 03-31-07 STATE OF CALIFORNIA

CITY OF MOUNTAIN VIEW
DEPARTMENT OF PUBLIC WORKS
STANDARD DETAIL

DOUBLE CHECK DETECTOR ASSEMBLY (BELOW GRADE)

FILE NO. D-5A

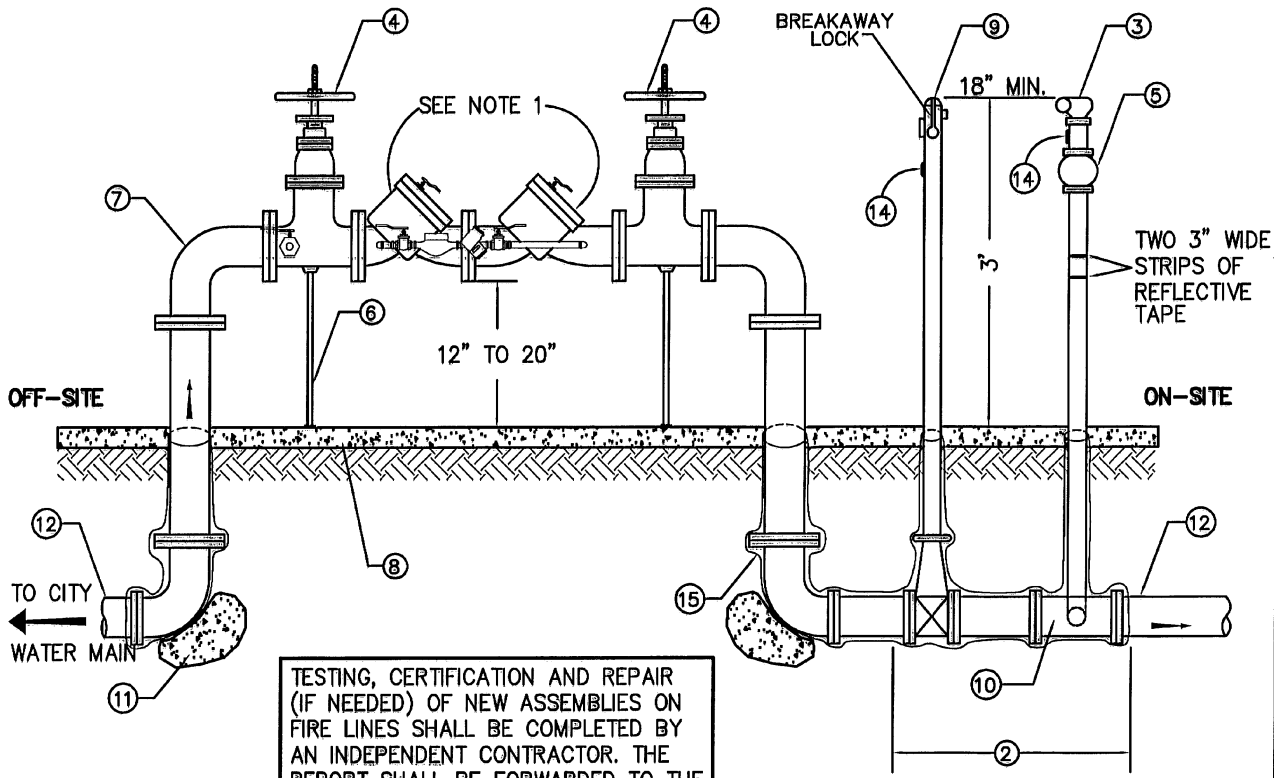

TESTING, CERTIFICATION AND REPAIR (IF NEEDED) OF NEW ASSEMBLIES ON FIRE LINES SHALL BE COMPLETED BY AN INDEPENDENT CONTRACTOR. THE REPORT SHALL BE FORWARDED TO THE CITY'S CROSS CONNECTION CONTROL SPECIALIST PRIOR TO ACCEPTANCE OF THE PROJECT.

NOTES:

1. DOUBLE CHECK DETECTOR ASSEMBLY (DCDA) PER CITY APPROVED MATERIAL LIST, OR CITY APPROVED EQUAL. APPROVED ASSEMBLY SHALL BE PURCHASED AND INSTALLED AS A WHOLE UNIT WITH GATE VALVES, BY-PASS METER, BY-PASS BACKFLOW PREVENTOR, AND BALL VALVES. METER SHALL READ IN CUBIC FEET.
2. FIRE PIT SHALL BE INSTALLED ON THE ADDRESS SIDE OF THE BUILDING UNLESS OTHERWISE APPROVED BY FIRE DEPT. OR PUBLIC WORKS DEPT.
3. FIRE DEPARTMENT CONNECTION (FDC) (2-2 1/2" INLETS WITH CLAPPERS) SHALL FACE STREET FRONTAGE. FINISHED LOCATION 5' MAX. BEHIND R/W.
4. OUTSIDE SCREW & YOKE (OS & Y) GATE VALVES SHALL BE ELECTRONICALLY MONITORED BY FIRE SPRINKLER MONITORING SYSTEM.
5. CHECK VALVE – U.L. LISTED, FM APPROVED.
6. INSTALL TWO ADJUSTABLE PIPE SUPPORTS (GRINNELL OR APPROVED EQUAL FOR 2 1/2" OR LARGER).
7. EXPOSED PIPING AND FITTINGS SHALL BE FLANGED DUCTILE IRON.
8. 3" THICK P.C.C. PAD – MINIMUM 2' WIDE.
9. POST INDICATOR VALVE (PIV) – U.L. LISTED.
10. M. J. TEE.
11. STANDARD P.C.C. THRUST BLOCKS – 2 CU FT FOR 3" & 4" DIA. PIPE.
12. PVC CLASS 150 (MIN.) C 900 OR DIP FOR ON-SITE; PVC CLASS 200 (MIN.) C 900 OR DIP FOR OFF-SITE.
13. ALL WEATHER EXPOSED SURFACES OF THE FDC AND PIV TO BE PAINTED RED.
14. APPROVED ADDRESS SIGN.
15. ALL FERROUS BURIED PIPES TO BE WRAPPED WITH 8-MIL POLYETHYLENE AND SECURE WITH 10-MIL POLY TAPE. ALL NUTS AND BOLTS SHALL BE MASTIC COATED.

Revision	Date	Approved

Drawn : QT Date : 04-15-05

Checked : RK Scale : NTS

APPROVED BY:

DEPUTY COMMUNITY DEVELOPMENT DIRECTOR

ASSISTANT PUBLIC WORKS DIRECTOR

04-15-05 DATE 03-31-07 EXP. 27089 R.C.E. NO.

REGISTERED PROFESSIONAL ENGINEER TIMOTHY Y. [illegible] NO. 27089 03-31-07 CIVIL STATE OF CALIFORNIA

CITY OF MOUNTAIN VIEW
DEPARTMENT OF PUBLIC WORKS
STANDARD DETAIL

DOUBLE CHECK DETECTOR ASSEMBLY (ABOVE GRADE)

FILE NO. D-5B

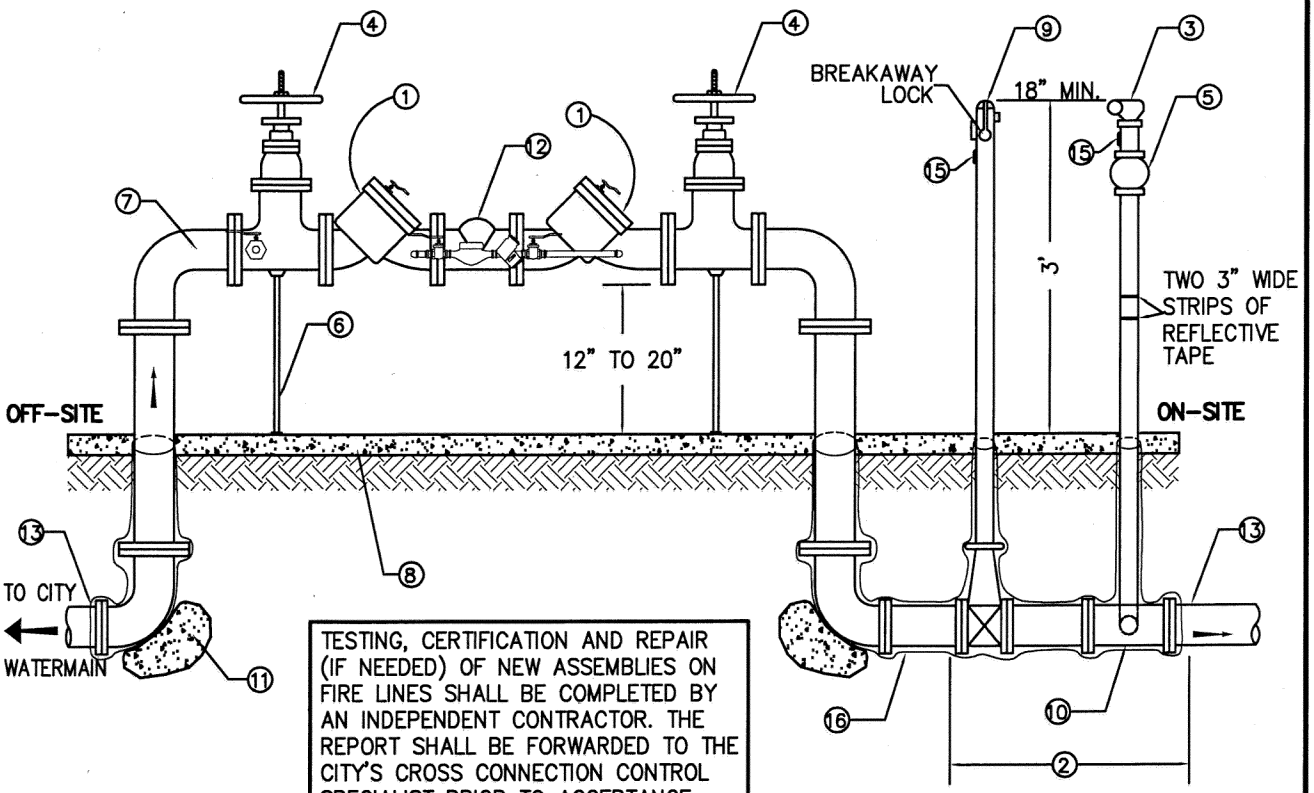

TESTING, CERTIFICATION AND REPAIR (IF NEEDED) OF NEW ASSEMBLIES ON FIRE LINES SHALL BE COMPLETED BY AN INDEPENDENT CONTRACTOR. THE REPORT SHALL BE FORWARDED TO THE CITY'S CROSS CONNECTION CONTROL SPECIALIST PRIOR TO ACCEPTANCE OF THE PROJECT.

NOTES:

1. REDUCED PRESSURE DETECTOR ASSEMBLY (RPDA) PER CITY APPROVED MATERIAL LIST, OR CITY APPROVED EQUAL. APPROVED ASSEMBLY SHALL BE PURCHASED AND INSTALLED AS A WHOLE UNIT WITH GATE VALVES, BY-PASS METER, BY-PASS BACKFLOW PREVENTER, AND BALL VALVES. METER SHALL READ IN CUBIC FEET.
2. FIRE PIT SHALL BE INSTALLED ON THE ADDRESS SIDE OF THE BUILDING UNLESS OTHERWISE APPROVED BY FIRE DEPT. OR PUBLIC WORKS DEPT.
3. FIRE DEPARTMENT CONNECTION (2-2 1/2" INLETS WITH CLAPPERS) SHALL FACE STREET FRONTAGE. FINISHED LOCATION 5' MAX. BEHIND R/W.
4. OUTSIDE SCREW & YOKE (OS & Y) GATE VALVES SHALL BE ELECTRONICALLY MONITORED BY FIRE SPRINKLER MONITORING SYSTEM.
5. CHECK VALVE – UL LISTED, FM APPROVED.
6. INSTALL TWO ADJUSTABLE PIPE SUPPORTS (GRINNELL OR APRROVED EQUAL FOR 2 1/2" OR LARGER).
7. EXPOSED PIPING AND FITTINGS SHALL BE FLANGED DUCTILE IRON.
8. 3" THICK P.C.C. PAD – MINIMUM 2' WIDE.
9. POST INDICATOR VALVE – UL LISTED.
10. M. J. TEE.
11. STANDARD P.C.C. THRUST BLOCKS – 2 CU FT FOR 3" & 4" DIA. PIPE.
12. AIR RELIEF VALVE.
13. PVC CLASS 150 (MIN.) C 900 OR DIP FOR ON-SITE; PVC CLASS 200 (MIN.) C 900 OR DIP FOR OFF-SITE.
14. ALL WEATHER EXPOSED SURFACES OF THE FDC AND PIV TO BE PAINTED RED.
15. APPROVED ADDRESS SIGN.
16. ALL FERROUS BURIED PIPES TO BE WRAPPED WITH 8-MIL POLYETHYLENE AND SECURE WITH 10-MIL POLY TAPE. ALL NUTS AND BOLTS SHALL BE MASTIC COATED.

Revision	Date	Approved

Drawn : QT — Date : 04-15-05

Checked : RK — Scale : NTS

APPROVED BY:

DEPUTY COMMUNITY DEVELOPMENT DIRECTOR

ASSISTANT PUBLIC WORKS DIRECTOR

04-15-05	03-31-07	27089
DATE	EXP.	R.C.E. NO.

REGISTERED PROFESSIONAL ENGINEER — CITY ENGINEER — No. 27089 — STATE OF CALIFORNIA

CITY OF MOUNTAIN VIEW
DEPARTMENT OF PUBLIC WORKS
STANDARD DETAIL

REDUCED PRESSURE DETECTOR ASSEMBLY

FILE NO. D-5C

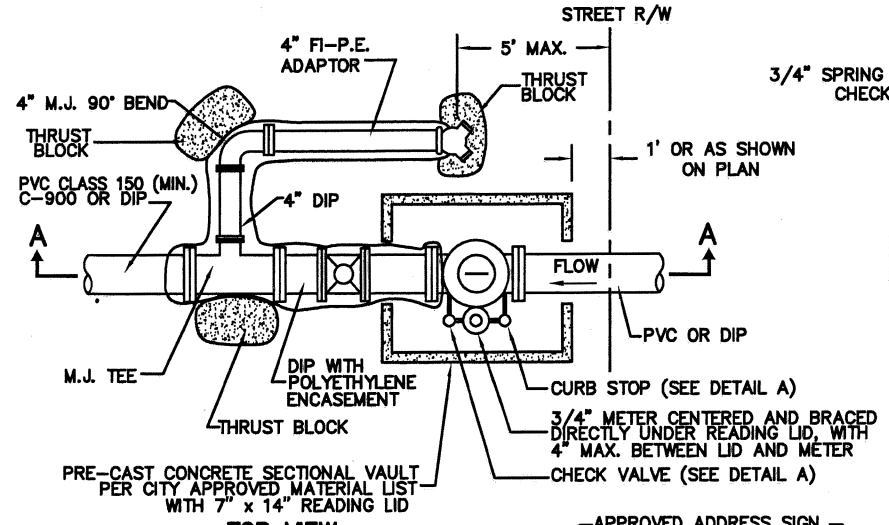

TOP VIEW

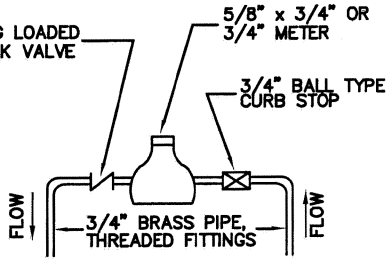

DETAIL A

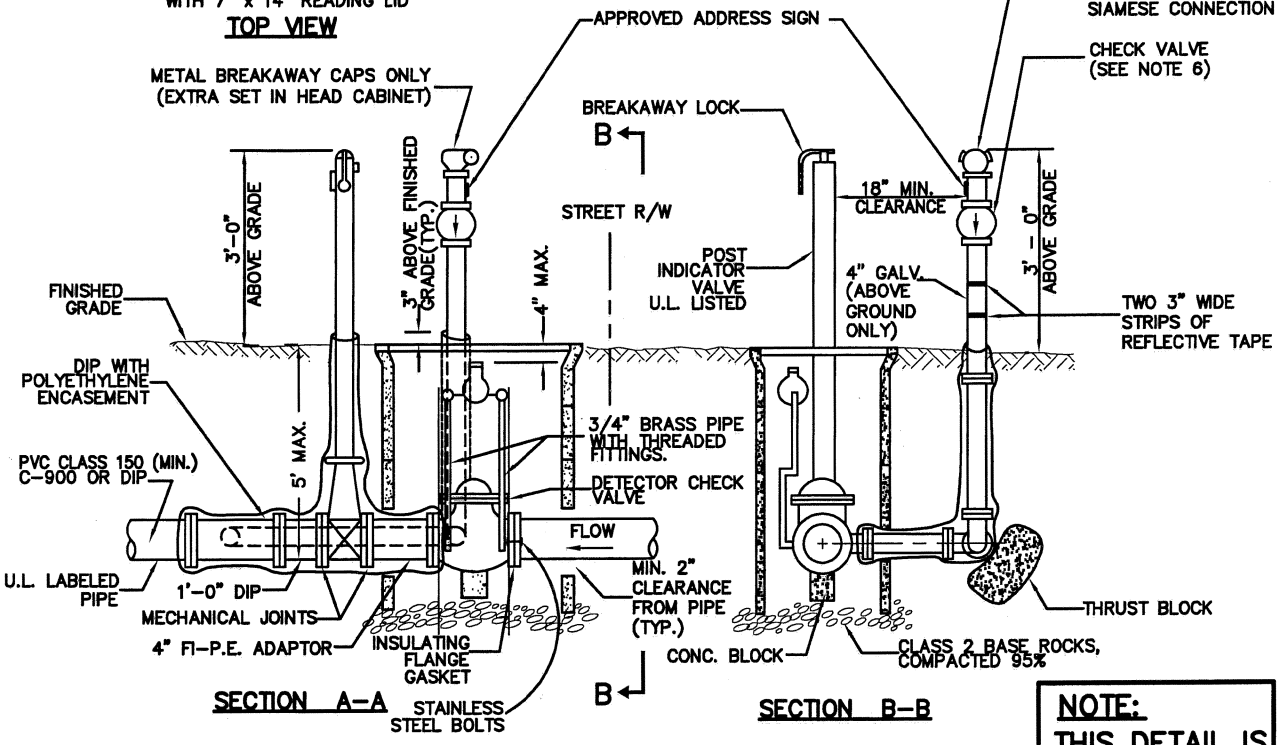

SECTION A-A

SECTION B-B

NOTE:
THIS DETAIL IS NOT FOR NEW CONSTRUCTION

NOTES:

1. METER TO BE 5/8" x 3/4" OR 3/4", ALL BRONZE, STRAIGHT READER IN CUBIC FEET.
2. ALL WEATHER EXPOSED SURFACES TO BE PAINTED RED.
3. ALL PROVISIONS FOR THRUST AND ANCHORAGE TO BE INCLUDED.
4. ALL FERROUS BURIED PIPES TO BE WRAPPED WITH 8-MIL POLYETHYLENE AND SECURED WITH 10-MIL POLY TAPE. ALL NUTS AND BOLTS SHALL BE MASTIC COATED.
5. SECURE DETECTOR METER AND PIPING TO 3/4" REBAR SUPPORTS, 24" INTO GROUND.
6. ABOVE GROUND CHECK VALVE SHALL BE U.L. LISTED, FM APPROVED.
7. FIRE PIT SHALL BE INSTALLED ON THE ADDRESS SIDE OF THE BUILDING UNLESS OTHERWISE APPROVED BY FIRE DEPARTMENT AND PUBLIC WORKS DEPARTMENT.

Revision	Date	Approved

Drawn : QT — Date : 04-15-05

Checked : RK — Scale : NTS

APPROVED BY: REGISTERED PROFESSIONAL ENGINEER TIMOTHY Y. LEE No. 27089 CIVIL ENGINEER STATE OF CALIFORNIA

DEPUTY COMMUNITY DEVELOPMENT DIRECTOR

ASSISTANT PUBLIC WORKS DIRECTOR

04-15-05	03-31-07	27089
DATE	EXP.	R.C.E. NO.

CITY OF MOUNTAIN VIEW
DEPARTMENT OF PUBLIC WORKS
STANDARD DETAIL

STANDARD DETECTOR CHECK

FILE NO. D-6

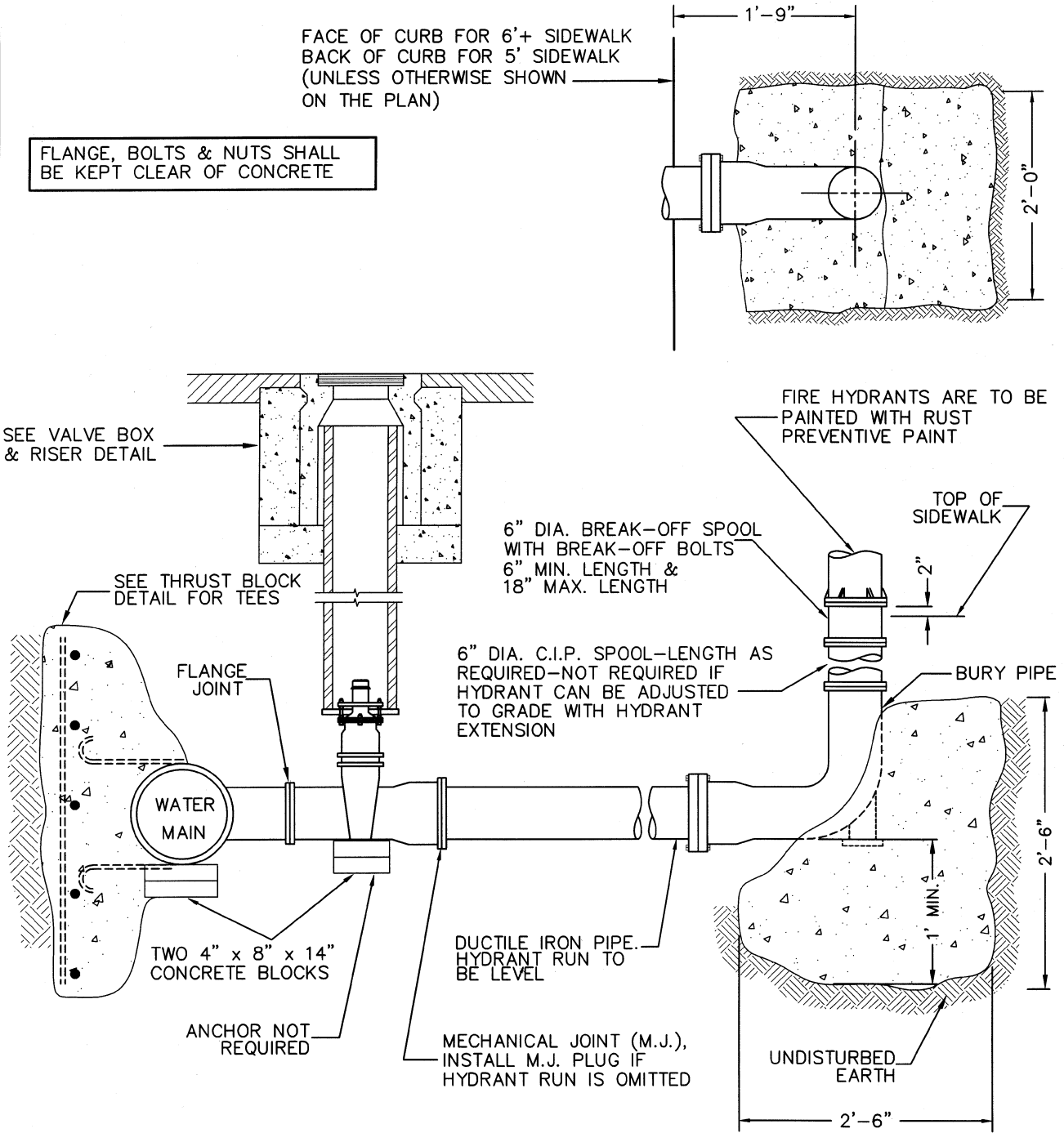

Revision	Date	Approved

Drawn : QT Date : 05-20-99

Checked : RK Scale : NTS

APPROVED BY:

ASSISTANT PUBLIC WORKS DIRECTOR

06-29-99 DATE 03-31-01 EXP. 27089 R.C.E. NO.

REGISTERED PROFESSIONAL ENGINEER TIMOTHY Y. OU No. 27089 EXP. 03-31-01 STATE OF CALIFORNIA

CITY OF MOUNTAIN VIEW
DEPARTMENT OF PUBLIC WORKS
STANDARD DETAIL

STANDARD
FIRE HYDRANT INSTALLATION

FILE NO. D-7

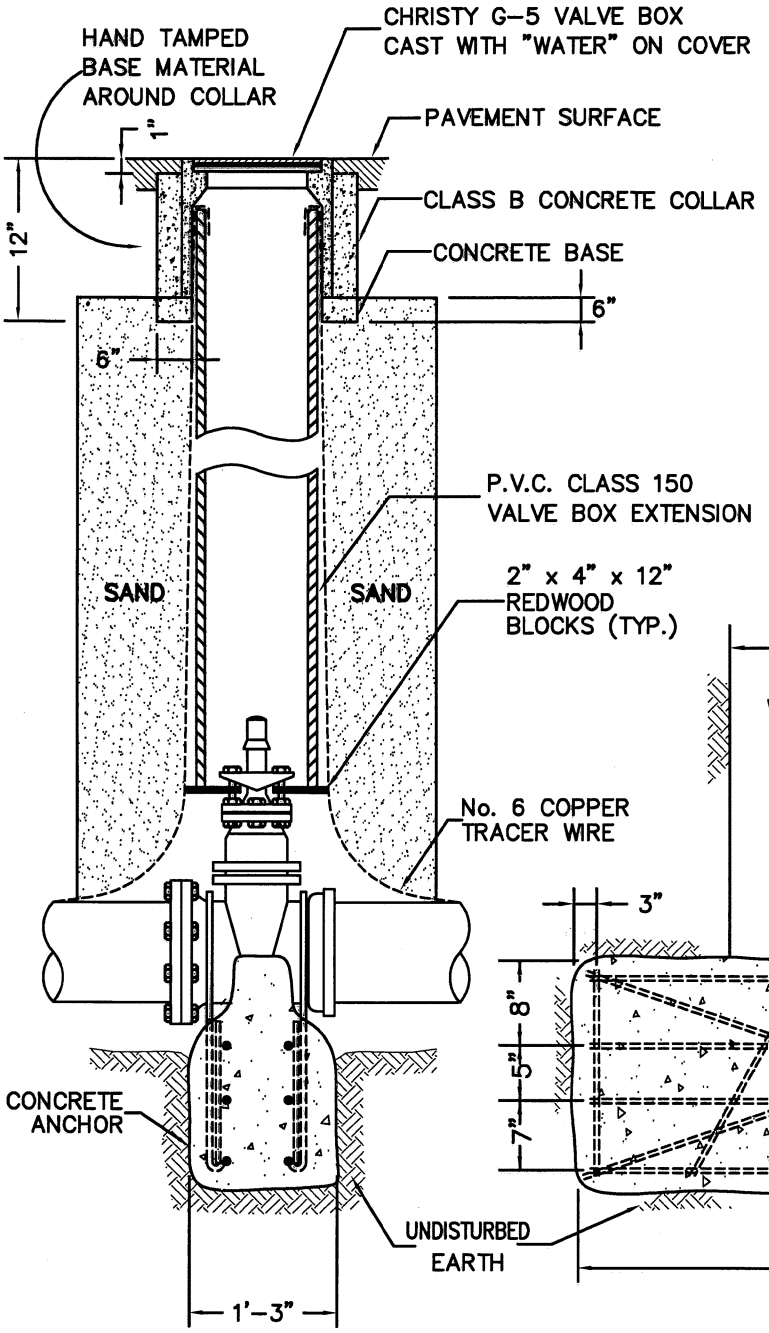

VALVE	ANCHORS
VALVE SIZE	"A"
6"	1'-6"
8"	2'-6"
10"	4'-0"
12"	6'-0"
14"	7'-8"
16"	10'-0"

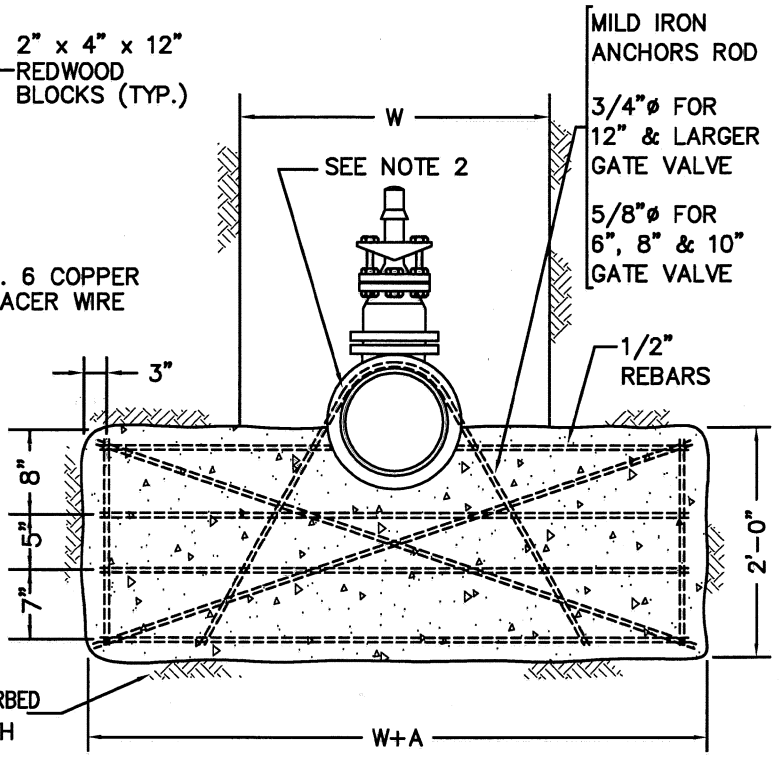

NOTES:

1. FLANGES, BOLTS, AND NUTS SHALL BE KEPT CLEAR OF CONCRETE
2. COAT EXPOSED PORTIONS OF ANCHOR RODS WITH A MASTIC COATING SOLUTION AND WRAP IN 10 MIL POLYETHYLENE TAPE.

Revision	Date	Approved
Drawn : QT	Date : 02-25-05	
Checked : RK	Scale : NTS	

APPROVED BY:

ASSISTANT PUBLIC WORKS DIRECTOR

02-25-05	03-31-07	27089
DATE	EXP.	R.C.E. NO.

REGISTERED PROFESSIONAL ENGINEER TIMOTHY Y. CHIU No. 27089 EXP. 03-31-07 STATE OF CALIFORNIA

CITY OF MOUNTAIN VIEW
DEPARTMENT OF PUBLIC WORKS
STANDARD DETAIL

STANDARD

GATE VALVE BOX AND ANCHOR

FILE NO. D-8

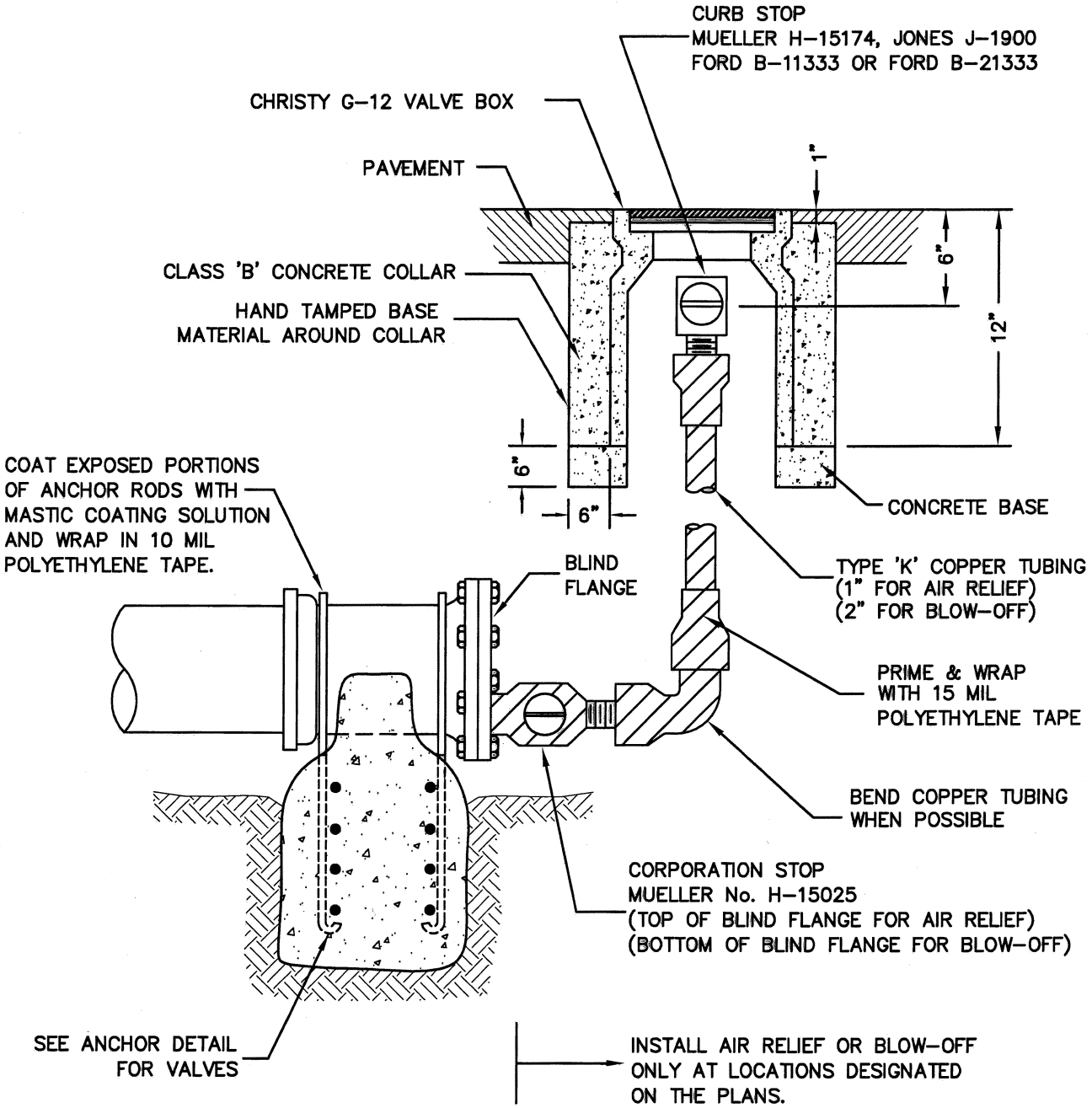

Revision	Date	Approved

Drawn : QT | Date : 02-25-05

Checked : RK | Scale : NTS

APPROVED BY:

ASSISTANT PUBLIC WORKS DIRECTOR

02-25-05 DATE | 03-31-07 EXP. | 27089 R.C.E. NO.

REGISTERED PROFESSIONAL ENGINEER TIMOTHY Y. KO No. 27089 EXP. 03-31-07 STATE OF CALIFORNIA

CITY OF MOUNTAIN VIEW
DEPARTMENT OF PUBLIC WORKS
STANDARD DETAIL

STANDARD BLIND FLANGE WITH BLOW-OFF AT END OF MAIN

FILE NO. D-9

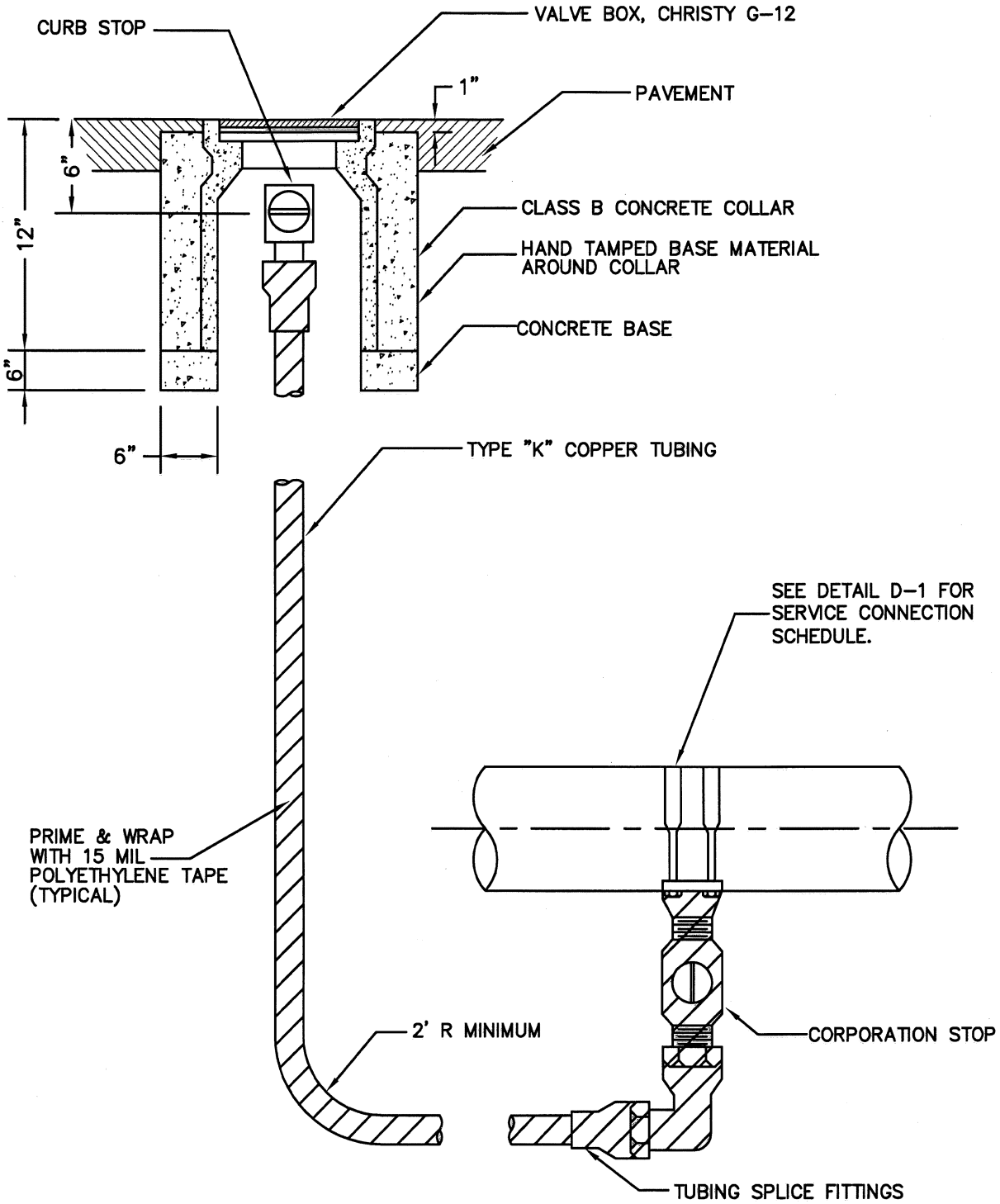

Revision	Date	Approved
Drawn : QT	Date : 02-25-05	
Checked : RK	Scale : NTS	

APPROVED BY:

ASSISTANT PUBLIC WORKS DIRECTOR

02-25-05	03-31-07	27089
DATE	EXP.	R.C.E. NO.

REGISTERED PROFESSIONAL ENGINEER TIMOTHY Y. KO No. 27089 EXP. 03-31-07 STATE OF CALIFORNIA

CITY OF MOUNTAIN VIEW
DEPARTMENT OF PUBLIC WORKS
STANDARD DETAIL

2" STANDARD BLOW-OFF VALVE

FILE NO. D-10

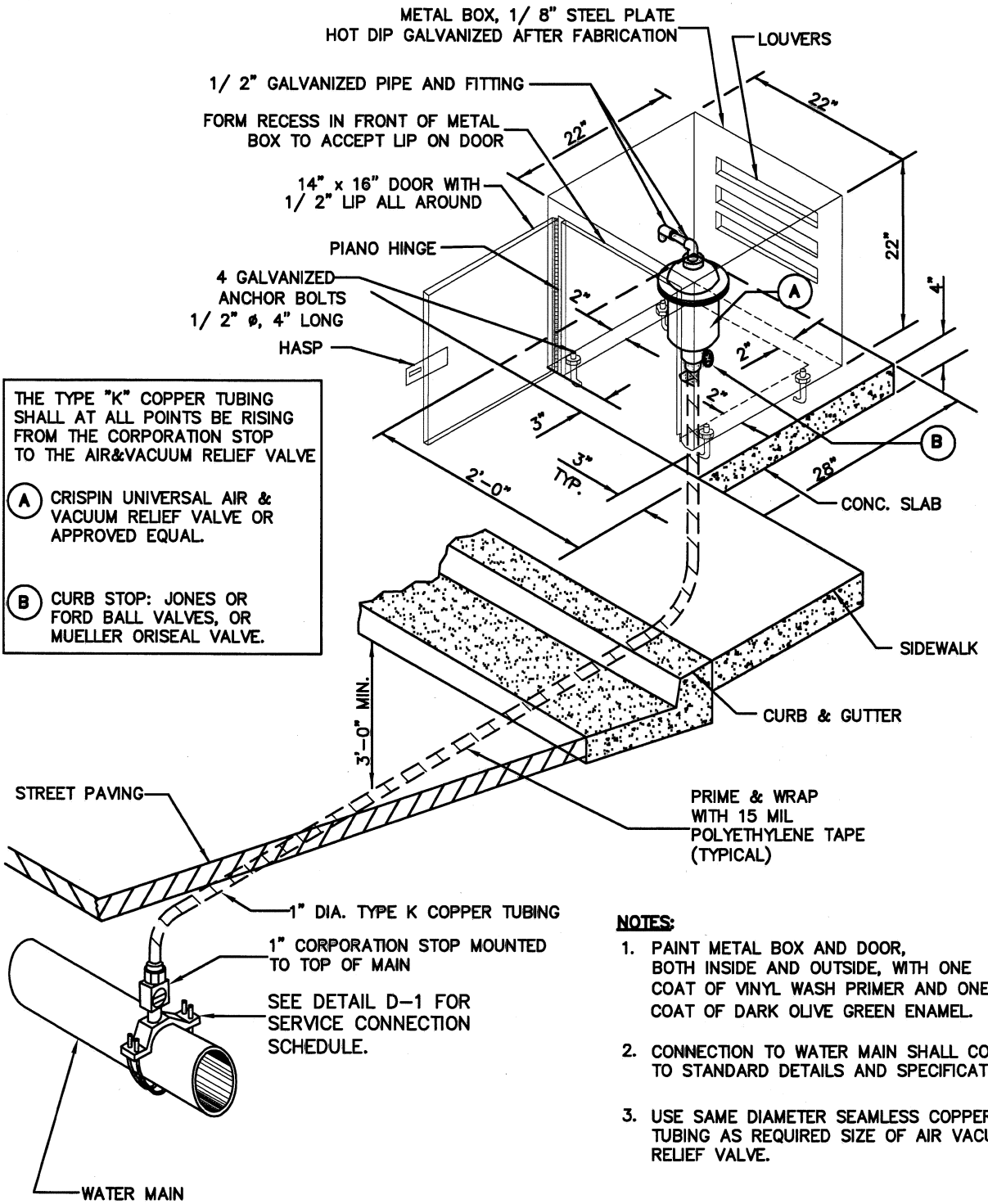

THE TYPE "K" COPPER TUBING SHALL AT ALL POINTS BE RISING FROM THE CORPORATION STOP TO THE AIR&VACUUM RELIEF VALVE

(A) CRISPIN UNIVERSAL AIR & VACUUM RELIEF VALVE OR APPROVED EQUAL.

(B) CURB STOP: JONES OR FORD BALL VALVES, OR MUELLER ORISEAL VALVE.

NOTES:

1. PAINT METAL BOX AND DOOR, BOTH INSIDE AND OUTSIDE, WITH ONE COAT OF VINYL WASH PRIMER AND ONE COAT OF DARK OLIVE GREEN ENAMEL.
2. CONNECTION TO WATER MAIN SHALL CONFORM TO STANDARD DETAILS AND SPECIFICATIONS.
3. USE SAME DIAMETER SEAMLESS COPPER TUBING AS REQUIRED SIZE OF AIR VACUUM RELIEF VALVE.

Revision	Date	Approved

Drawn : QT | Date : 02-25-05

Checked : RK | Scale : NTS

APPROVED BY:

ASSISTANT PUBLIC WORKS DIRECTOR

REGISTERED PROFESSIONAL ENGINEER TIMOTHY Y. CHEUNG NO. 27089 EXP. 03-31-07 STATE OF CALIFORNIA

02-25-05	03-31-07	27089
DATE	EXP.	R.C.E. NO.

CITY OF MOUNTAIN VIEW
DEPARTMENT OF PUBLIC WORKS
STANDARD DETAIL

STANDARD AIR RELIEF VALVE

FILE NO. D-11

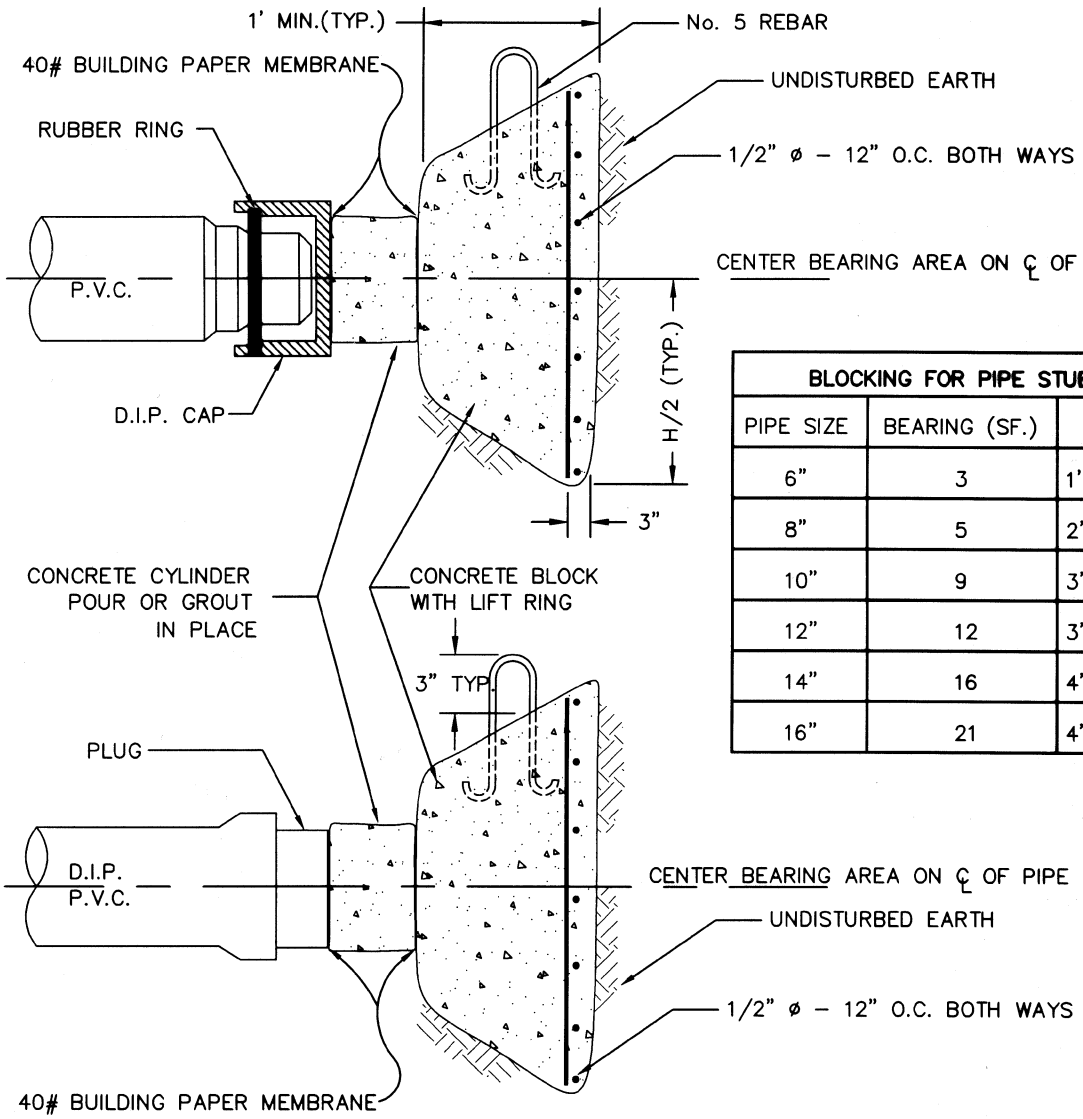

BLOCKING FOR PIPE STUB–OUT		
PIPE SIZE	BEARING (SF.)	L x H
6"	3	1'–9" x 1'–9"
8"	5	2'–3" x 2'–3"
10"	9	3'–0" x 3'–0"
12"	12	3'–5" x 3'–5"
14"	16	4'–0" x 4'–0"
16"	21	4'–7" x 4'–7"

Revision	Date	Approved
Drawn : QT	Date : 05-22-99	
Checked : RK	Scale : NTS	

APPROVED BY:

ASSISTANT PUBLIC WORKS DIRECTOR

06-29-99 DATE | 03-31-01 EXP. | 27089 R.C.E. NO.

REGISTERED PROFESSIONAL ENGINEER TIMOTHY Y. QIAN No. 27089 EXP. 03-31-01 CIVIL STATE OF CALIFORNIA

CITY OF MOUNTAIN VIEW
DEPARTMENT OF PUBLIC WORKS
STANDARD DETAIL

STANDARD
P.V.C. AND D.I.P. STUB–OUT

FILE NO. D–12

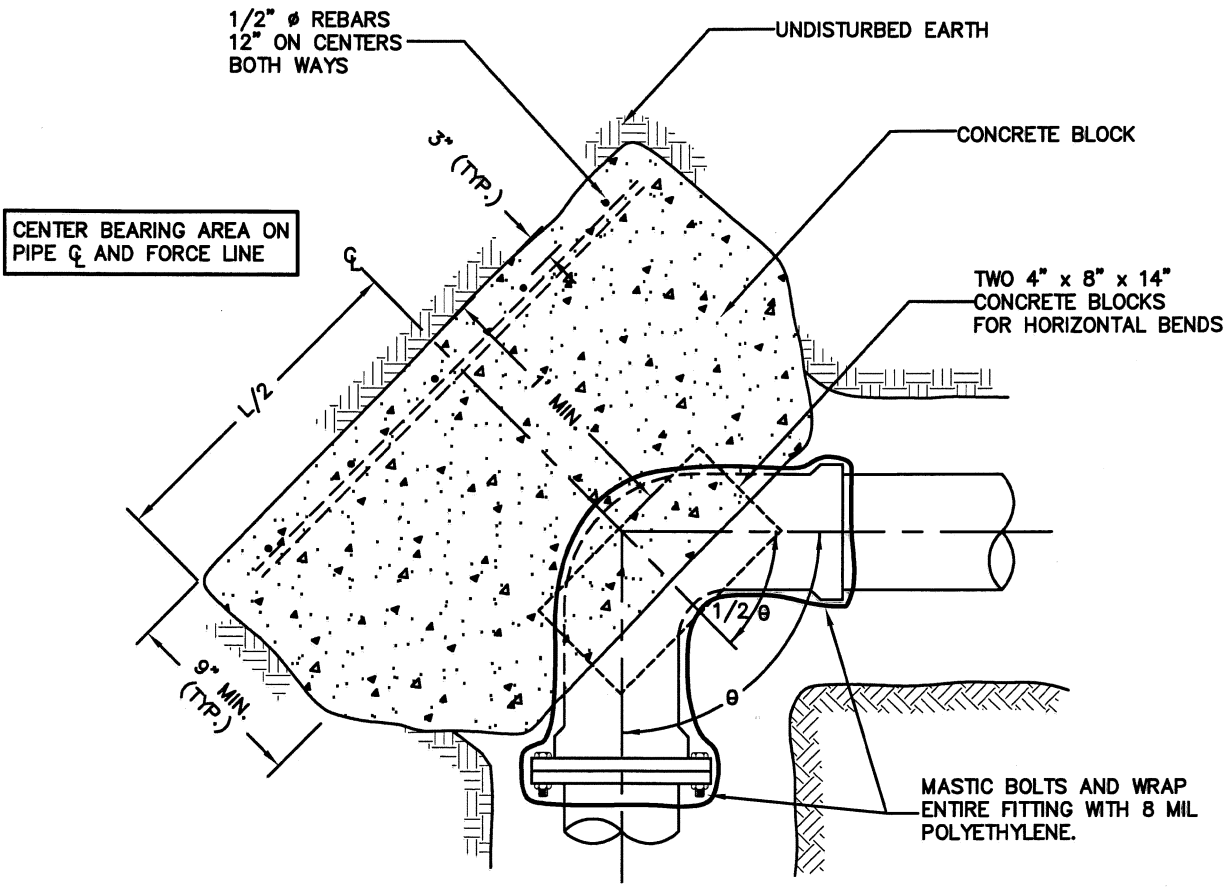

NOTE:

FLANGES, BOLTS, AND NUTS SHALL BE KEPT CLEAR OF CONCRETE

H = HEIGHT
L = WIDTH

PIPE	REQUIRED AREA – SQ. FT.					DIMENSIONS – L x H				
SIZE	5 5/8°	11 1/4°	22 1/2°	45°	90°	5 5/8°	11 1/4°	22 1/2°	45°	90°
6"	1	1	2	3	5	1'–0" x 1'–0"	1'–0" x 1'–0"	1'–5" x 1'–5"	1'–9" x 1'–9"	2'–3" x 2'–3"
8"	1	1	2	4	8	1'–0" x 1'–0"	1'–0" x 1'–0"	1'–5" x 1'–5"	2'–0" x 2'–0"	2'–10" x 2'–10"
10"	1	2	4	7	12	1'–0" x 1'–0"	1'–5" x 1'–5"	2'–0" x 2'–0"	2'–8" x 2'–8"	3'–5" x 3'–5"
12"	1	3	5	9	17	1'–0" x 1'–0"	1'–9" x 1'–9"	2'–3" x 2'–3"	3'–0" x 3'–0"	4'–2" x 4'–2"
14"	2	3	7	13	23	1'–5" x 1'–5"	1'–9" x 1'–9"	2'–8" x 2'–8"	3'–6" x 3'–6"	4'–10" x 4'–10"
16"	2	4	8	16	29	1'–5" x 1'–5"	2'–0" x 2'–0"	2'–10" x 2'–10"	4'–0" x 4'–0"	5'–5" x 5'–5"

Revision	Date	Approved

Drawn : QT Date : 02-25-05

Checked : RK Scale : NTS

APPROVED BY:

ASSISTANT PUBLIC WORKS DIRECTOR

02-25-05	03-31-07	27089
DATE	EXP.	R.C.E. NO.

REGISTERED PROFESSIONAL ENGINEER TIMOTHY Y. RO No. 27089 EXP. 03-31-07 STATE OF CALIFORNIA

CITY OF MOUNTAIN VIEW
DEPARTMENT OF PUBLIC WORKS
STANDARD DETAIL

STANDARD THRUST BLOCK
FOR
HORIZONTAL AND VERTICAL DOWNWARD BENDS

FILE NO. D–13

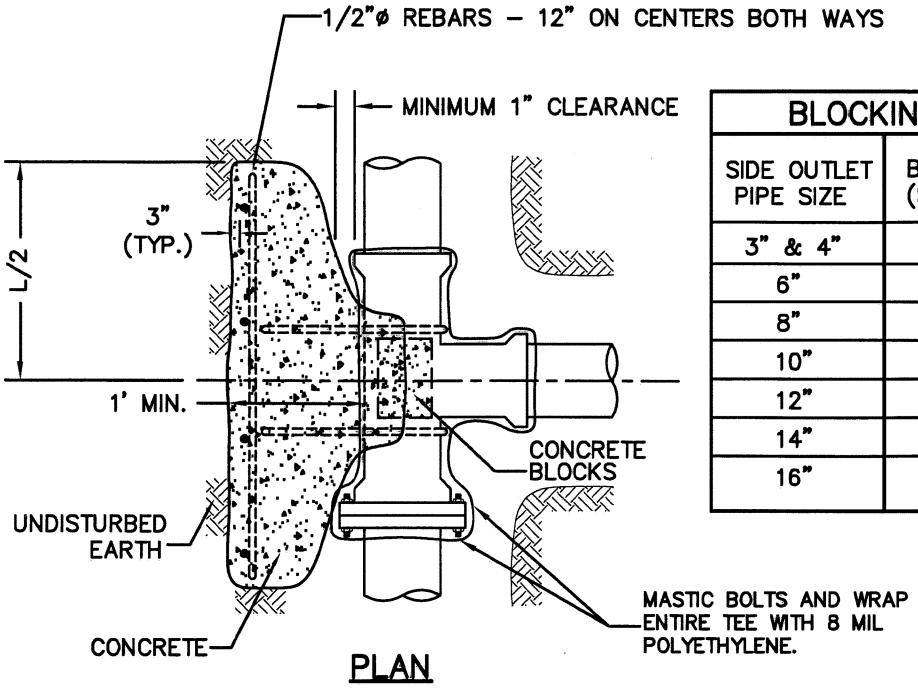

PLAN

BLOCKING FOR PIPE TEES		
SIDE OUTLET PIPE SIZE	BEARING (S.F.)	L x H
3" & 4"	2	1'–5" x 1'–5"
6"	3	1'–9" x 1'–9"
8"	5	2'–3" x 2'–3"
10"	9	3'–0" x 3'–0"
12"	12	3'–5" x 3'–5"
14"	16	4'–0" x 4'–0"
16"	21	4'–7" x 4'–7"

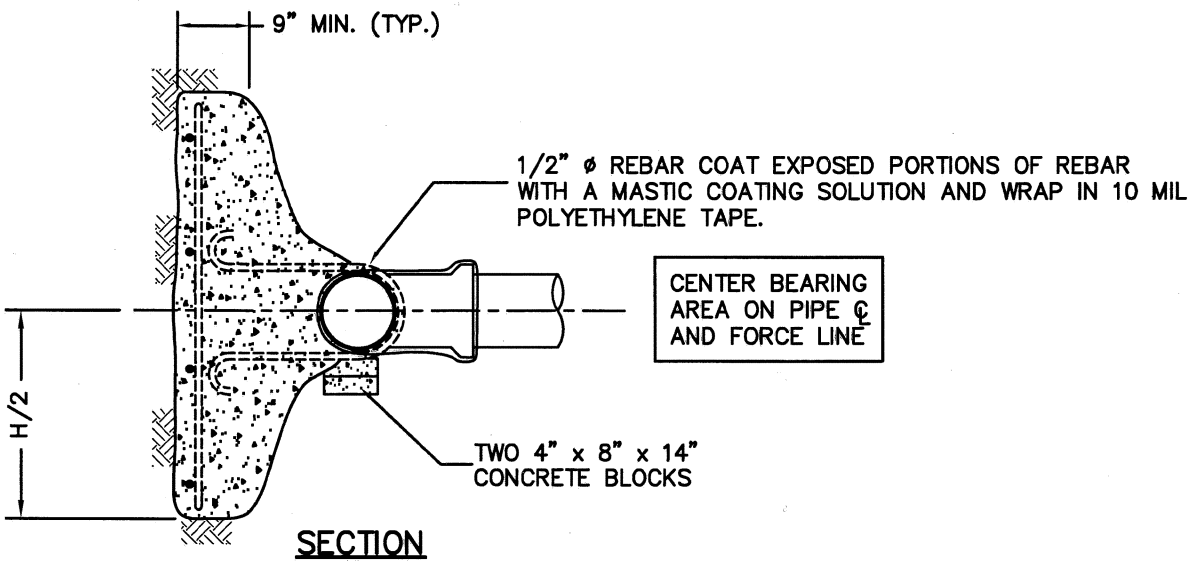

SECTION

NOTE:

FLANGES, BOLTS, AND NUTS SHALL BE KEPT CLEAR OF CONCRETE.

Revision	Date	Approved
Drawn : QT	Date : 02-25-05	
Checked : RK	Scale : NTS	

APPROVED BY:

ASSISTANT PUBLIC WORKS DIRECTOR

02-25-05	03-31-07	27089
DATE	EXP.	R.C.E. NO.

REGISTERED PROFESSIONAL ENGINEER TIMOTHY YOUNG No. 27089 EXP. 03-31-07 STATE OF CALIFORNIA

CITY OF MOUNTAIN VIEW
DEPARTMENT OF PUBLIC WORKS
STANDARD DETAIL

STANDARD THRUST BLOCK FOR TEES

FILE NO. D-14

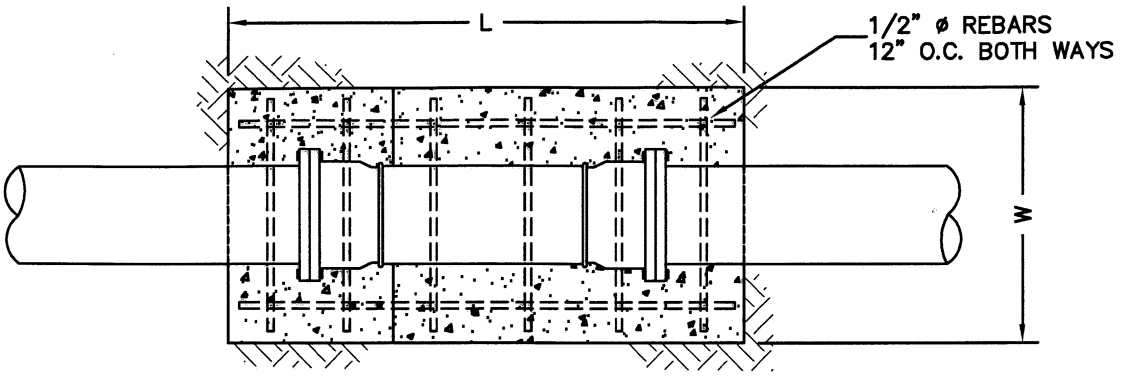

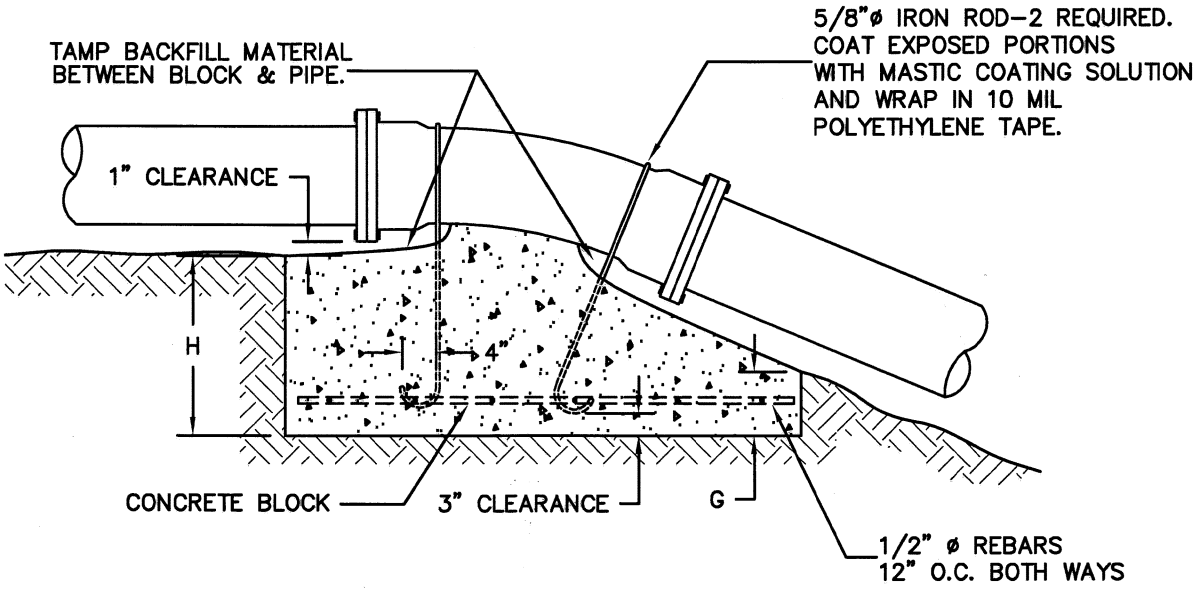

THRUST BLOCK DIMENSION–UPWARD THRUST												
PIPE SIZE	11 1/4° BEND				22 1/2° BEND				45° BEND			
	L	W	H	G	L	W	H	G	L	W	H	G
6"	2'0"	2'0"	1'0"	9"	2'0"	2'0"	2'0"	1'0"	3'0"	2'0"	2'0"	6"
8"	2'0"	2'0"	1'0"	9"	3'0"	2'0"	2'0"	1'0"	4'6"	2'0"	3'0"	6"
10"	3'0"	2'0"	2'0"	1'8"	4'0"	2'0"	2'0"	1'0"	6'0"	2'0"	3'8"	6"
12"	3'0"	2'0"	2'0"	1'8"	6'0"	2'0"	2'0"	1'0"	7'0"	2'6"	4'0"	6"

NOTE:

FLANGES, NUTS AND BOLTS SHALL BE KEEP CLEAR OF CONCRETE.

Revision	Date	Approved

Drawn : QT | Date : 02-25-05

Checked : RK | Scale : NTS

APPROVED BY:

ASSISTANT PUBLIC WORKS DIRECTOR

02-25-05	03-31-07	27089
DATE	EXP.	R.C.E. NO.

REGISTERED PROFESSIONAL ENGINEER TIMOTHY Y. KO No. 27089 EXP. 03-31-07 STATE OF CALIFORNIA

CITY OF MOUNTAIN VIEW
DEPARTMENT OF PUBLIC WORKS
STANDARD DETAIL

STANDARD ANCHOR
FOR UPWARD THRUST

FILE NO. D–15

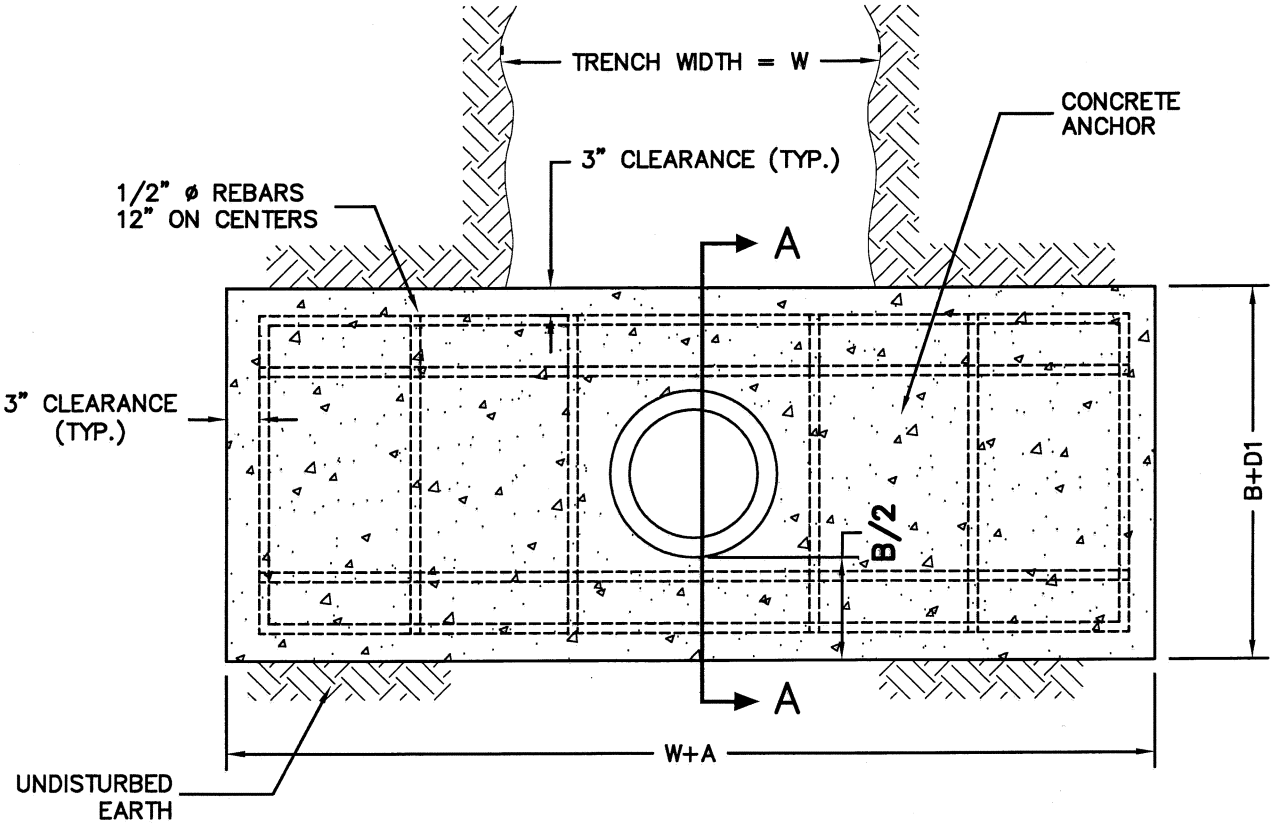

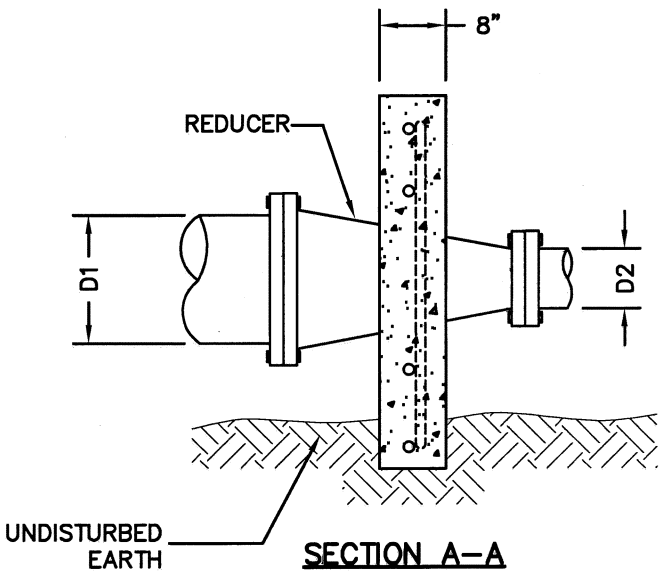

SECTION A–A

ANCHORS FOR REDUCER		
REDUCER SIZE D1 x D2	A	B
12"x10"	2'–0"	2'–0"
12"x 8"	2'–6"	2'–0"
12"x 6"	3'–2"	2'–0"
8" x 6"	2'–0"	1'–4"
8" x 4"	2'–10"	1'–4"
6" x 4"	1'–4"	1'–4"

NOTE:

REDUCER ANCHOR IS REQUIRED ONLY WHEN LARGER CONNECTION JOINT IS OTHER THAN FLANGED

Revision	Date	Approved
Drawn : QT	Date : 02–25–05	
Checked : RK	Scale : NTS	

APPROVED BY:

ASSISTANT PUBLIC WORK DIRECTOR

02–25–05 DATE | 03–31–07 EXP. | 27089 R.C.E. NO.

REGISTERED PROFESSIONAL ENGINEER TIMOTHY Y. LO No. 27089 EXP. 03-31-07 STATE OF CALIFORNIA

CITY OF MOUNTAIN VIEW
DEPARTMENT OF PUBLIC WORKS
STANDARD DETAIL

STANDARD REDUCER ANCHOR

FILE NO. D–16

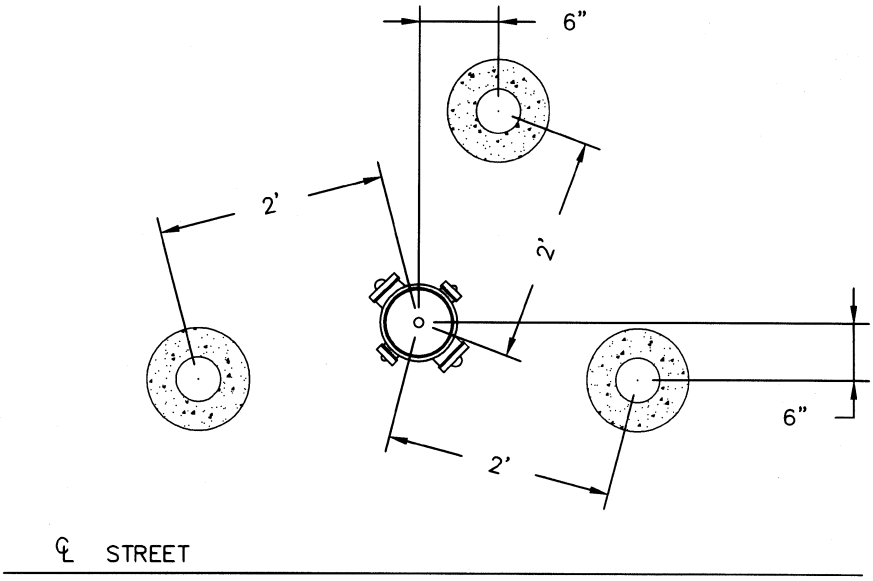

POST LOCATIONS

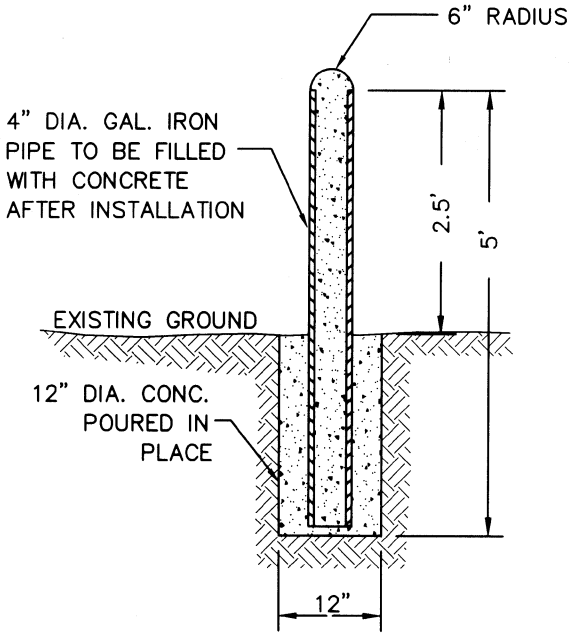

NOTE:

THE 4" IRON PIPE SHALL BE COATED WITH ZINC CHROMATE PRIMER BEFORE INSTALLATION.

Revision	Date	Approved
Drawn : QT	Date : 05-22-99	
Checked : RK	Scale : NTS	

APPROVED BY:

ASSISTANT PUBLIC WORKS DIRECTOR

REGISTERED PROFESSIONAL ENGINEER TIMOTHY Y. LO No. 27089 EXP. 03-31-01 CIVIL STATE OF CALIFORNIA

06-29-99	03-31-01	27089
DATE	EXP.	R.C.E. NO.

CITY OF MOUNTAIN VIEW
DEPARTMENT OF PUBLIC WORKS
STANDARD DETAIL

FIRE HYDRANT GUARD POST

FILE NO. D-17

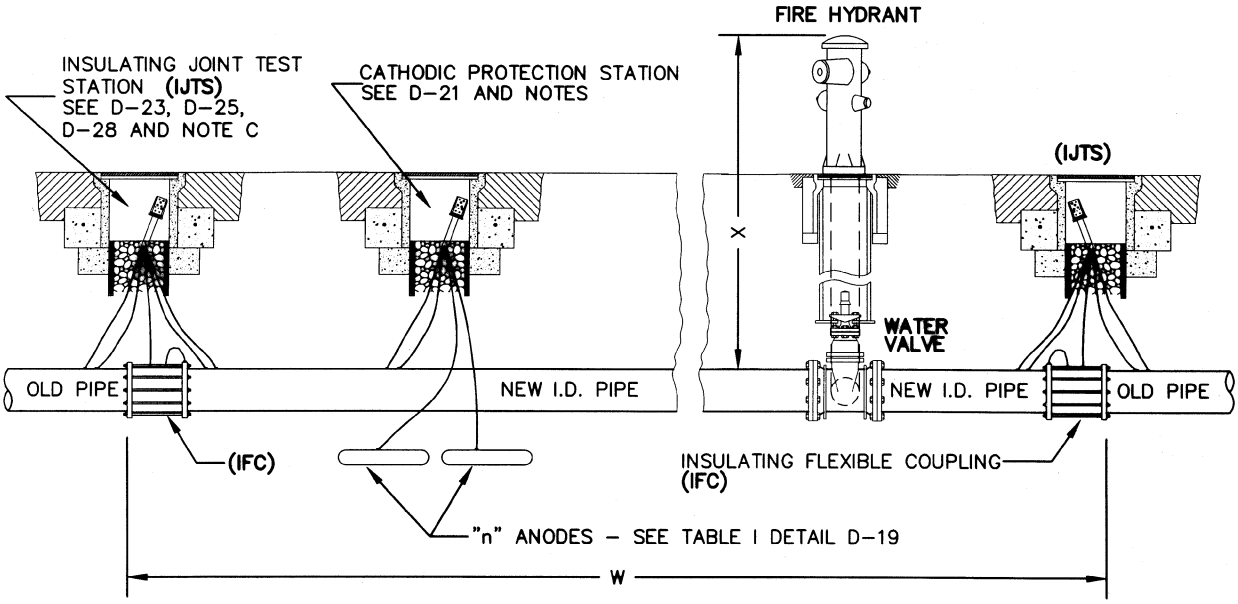

NOTES: TYPICAL CATHODIC PROTECTION SYSTEM

A. POLYETHYLENE ENCASED D.I. PIPE AND FITTINGS WITH BONDED JOINTS. (SEE D-26 FOR BONDING REQUIREMENTS).

B. DETERMINE ANODE TEST STATION (ATS) REQUIREMENTS BY THE FOLLOWING STEPS:

STEP 1: DETERMINE LENGTH (L) BY THE FOLLOWING FORMULA:

$$L = W + N (X + 5)$$

WHERE N = NUMBER OF FIRE HYDRANTS
X & W = DEFINED AS SHOWN ABOVE

STEP 2: DETERMINE SOIL RESISTIVITY OF SOIL AT PROPOSED ATS.

STEP 3: DETERMINE THE NUMBER OF "n" OF ANODES TO BE INSTALLED FROM TABLE I, D-19

C. INSULATING FITTING NOT REQUIRED FOR CONNECTION TO EXISTING NON-METALLIC PIPE. PROVIDE 2-WIRE TEST STATION AT D.I. PIPE ENDS PER D-25 WHERE INSULATING FITTINGS ARE NOT REQUIRED.

Revision	Date	Approved
Drawn : QT	Date : 05-23-99	
Checked : RK	Scale : NTS	

APPROVED BY: REGISTERED PROFESSIONAL ENGINEER TIMOTHY Y. O. No. 27089 EXP. 03-31-01 CIVIL STATE OF CALIFORNIA

ASSISTANT PUBLIC WORKS DIRECTOR

06-29-99 DATE | 03-31-01 EXP. | 27089 R.C.E. NO.

CITY OF MOUNTAIN VIEW
DEPARTMENT OF PUBLIC WORKS
STANDARD DETAIL

STANDARD CATHODIC PROTECTION SYSTEM
DUCTILE IRON PIPE

FILE NO. D-18

TABLE I:

NEW DUCTILE IRON PIPE LINES
ANODE REQUIREMENTS FOR WRAPPED PIPE
(WITH KNOWN SOIL RESISTIVITY)

SIZE OF PIPE D (INCHES)	PIPE LENGTH (FEET)	NUMBER "n" OF ANODES REQUIRED SOIL RESISTIVITY (Ohm-m)				
		LESS THAN 10	11 TO 30	31 TO 50	51 TO 70	71 TO 120
4	50	1	1	1	1	1
	100	1	1	1	1	2
	150	1	1	2	2	3
	200	1	1	2	2	3
	250	2	2 (1)	2	3	4
	300	2	2	3	3	5
6	50	1	1	1	1	1
	100	1	1	1	2	2
	150	2 (1)	2 (1)	2	2	3
	200	2 (1)	2	2	3	4
	250	2 (1)	2	3	4	5
	300	3 (1)	2	3	4	6
8	50	1	1	1	1	2
	100	1	1	2	2	3
	150	1	2 (1)	2	3	4
	200	2 (1)	2	3	4	5
	250	3 (1)	3 (2)	4	5	7
	300	3 (1)	3	4	6	8
12	50	1 (1)	1 (1)	1 (1)	2 (2)	3 (3)
	100	2 (1)	2 (2)	2 (2)	4 (3)	5 (5)
	150	3 (1)	3 (2)	4 (3)	5 (4)	8 (8)
	200	3 (1)	3 (3)	5 (4)	7 (6)	10 (9)
	250	4 (2)	4 (3)	5 (5)	8 (7)	13 (12)
	300	5 (2)	5 (4)	7 (6)	10 (8)	16 (14)

NOTES:

1. USE 20-POUND MAGNESIUM ANODES PER STANDARD DETAILS (SEE D-37). THE VALUES IN BRACKETS INDICATES THE NUMBER OF 60-POUND ANODES WHICH ARE REQUIRED IN LIEU OF 20-POUND ANODES.
2. IF SOIL RESISTIVITY IS NOT DETERMINED FOR THE LOCATION, USE MAGNESIUM ANODES FOR 71 TO 120 OHM-M SOIL RESISTIVITY.
3. TABULAR VALUES ARE BASED ON POLYETHYLENE ENCASED PIPE AND FITTINGS, BONDED FOR CONTINUITY AND OTHER ELECTRICALLY INSULATED METAL PIPES.

Revision	Date	Approved
Drawn : QT	Date : 05-23-99	
Checked : RK	Scale : NTS	

APPROVED BY: REGISTERED PROFESSIONAL ENGINEER TIMOTHY Y. QIAN No. 27089 EXP. 03-31-01 CIVIL STATE OF CALIFORNIA

ASSISTANT PUBLIC WORKS DIRECTOR

06-29-99 DATE | 03-31-01 EXP. | 27089 R.C.E. NO.

CITY OF MOUNTAIN VIEW
DEPARTMENT OF PUBLIC WORKS
STANDARD DETAIL

STANDARD DUCTILE IRON PIPE ANODE REQUIREMENTS (TABLE I)

FILE NO. D-19

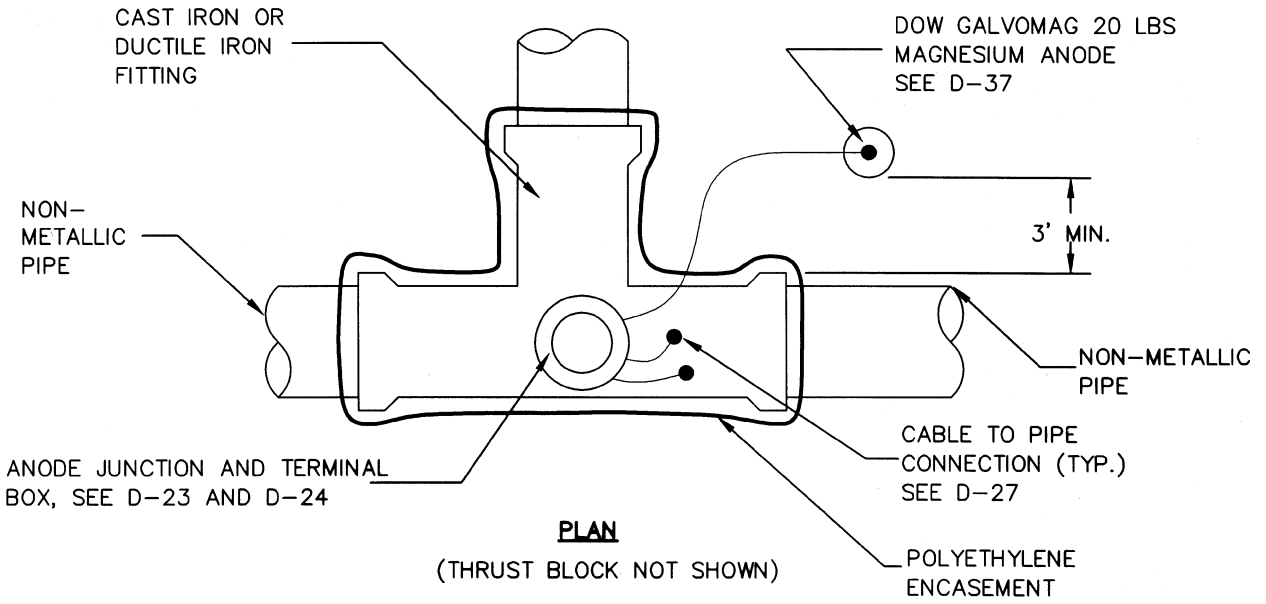

PLAN

(THRUST BLOCK NOT SHOWN)

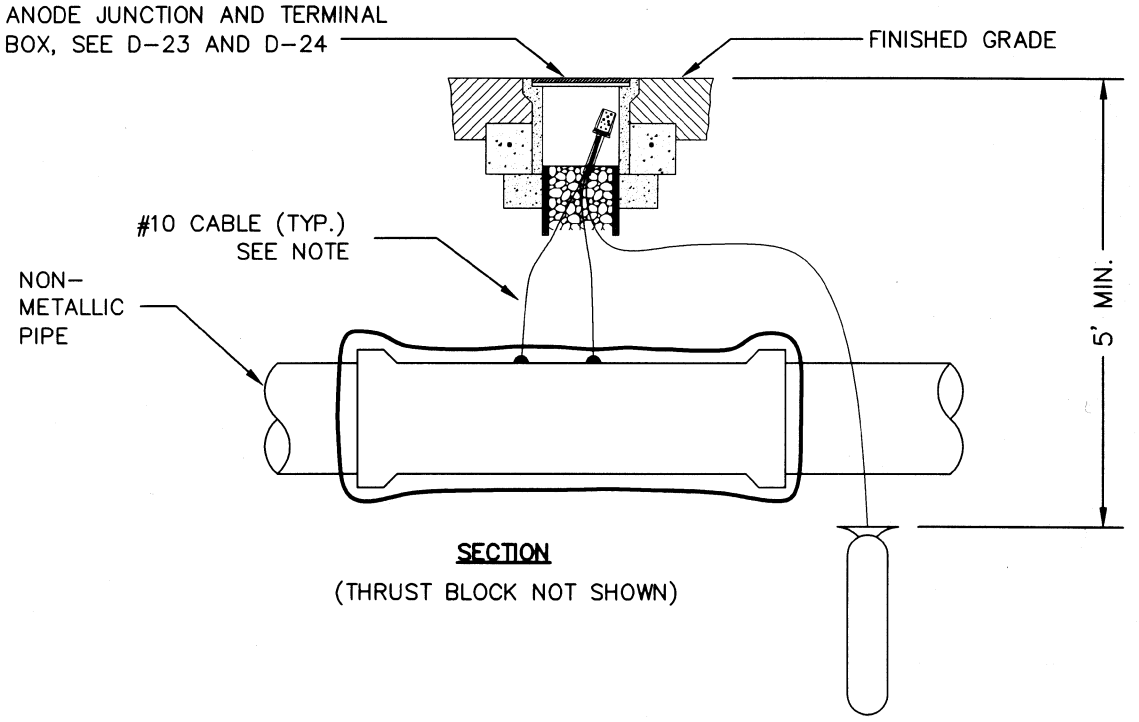

SECTION

(THRUST BLOCK NOT SHOWN)

NOTE:

PROVIDE 2-#10 TYPE CP CABLES FROM EACH FITTING AND BOND ALL METAL ELEMENTS PER D-26

Revision	Date	Approved
Drawn : QT	Date : 05-25-99	
Checked : RK	Scale : NTS	

APPROVED BY: Jim K

ASSISTANT PUBLIC WORKS DIRECTOR

06-29-99 DATE | 03-31-01 EXP. | 27089 R.C.E. NO.

REGISTERED PROFESSIONAL ENGINEER TIMOTHY Y. TOM No. 27089 EXP. 03-31-01 CIVIL STATE OF CALIFORNIA

CITY OF MOUNTAIN VIEW
DEPARTMENT OF PUBLIC WORKS
STANDARD DETAIL

STANDARD DUCTILE IRON AND CAST IRON FITTINGS CATHODIC PROTECTION FOR NON-METALLIC PIPE

FILE NO. D-20

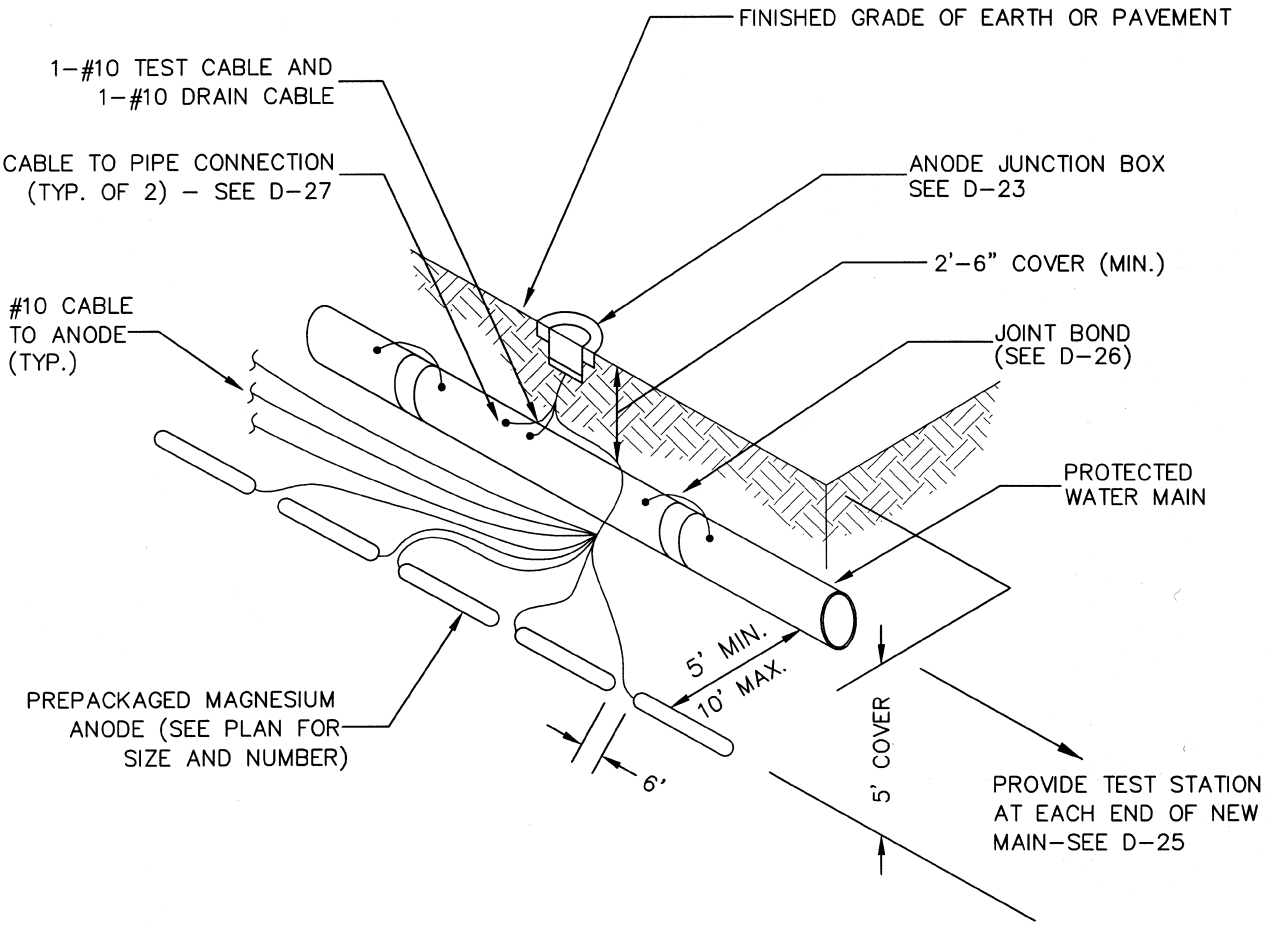

Revision	Date	Approved
Drawn : QT	Date : 05-19-99	
Checked : RK	Scale : NTS	

APPROVED BY:

ASSISTANT PUBLIC WORKS DIRECTOR

06-29-99 DATE | 03-31-01 EXP. | 27089 R.C.E. NO.

REGISTERED PROFESSIONAL ENGINEER TIMOTHY Y. TO No. 27089 EXP. 03-31-01 STATE OF CALIFORNIA

CITY OF MOUNTAIN VIEW
DEPARTMENT OF PUBLIC WORKS
STANDARD DETAIL

STANDARD CATHODIC PROTECTION STATION ANODE INSTALLATION

FILE NO. D-21

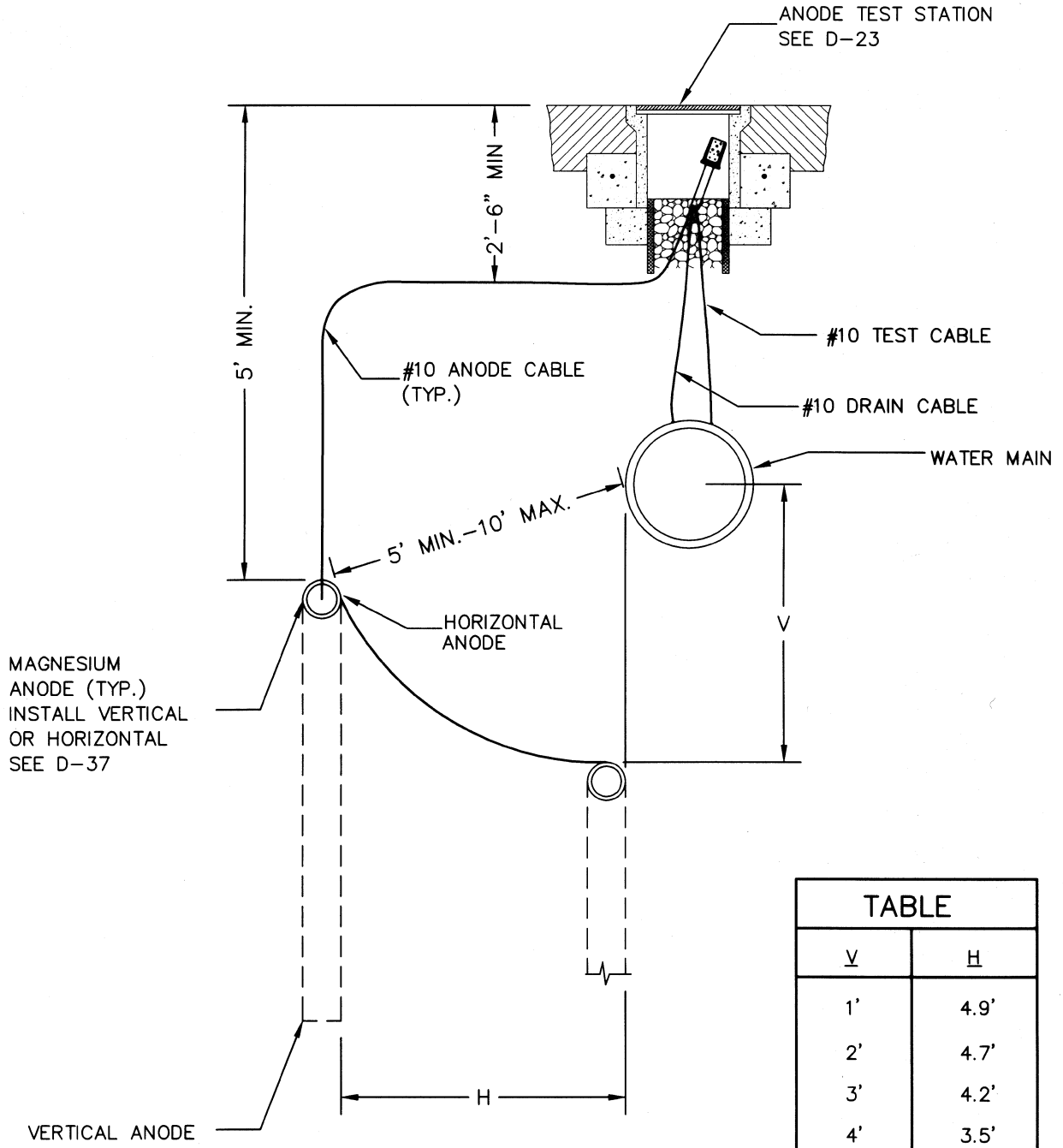

TABLE	
V	H
1'	4.9'
2'	4.7'
3'	4.2'
4'	3.5'
5'	2.4'
6'	0'

NOTE: ANODES MUST BE AT LEAST 5' FROM PIPE (SEE TABLE). VERTICAL INSTALLATION METHOD REQUIRES 10' O.C. BETWEEN ANODES.

Revision	Date	Approved
Drawn : QT	Date : 05-19-99	
Checked : RK	Scale : NTS	

APPROVED BY:

ASSISTANT PUBLIC WORKS DIRECTOR

06-29-99 DATE | 03-31-01 EXP. | 27089 R.C.E. NO.

REGISTERED PROFESSIONAL ENGINEER TIMOTHY Y. TO No. 27089 EXP. 03-31-01 STATE OF CALIFORNIA

CITY OF MOUNTAIN VIEW
DEPARTMENT OF PUBLIC WORKS
STANDARD DETAIL

STANDARD ALTERNATIVE ANODE INSTALLATION

FILE NO. D-22

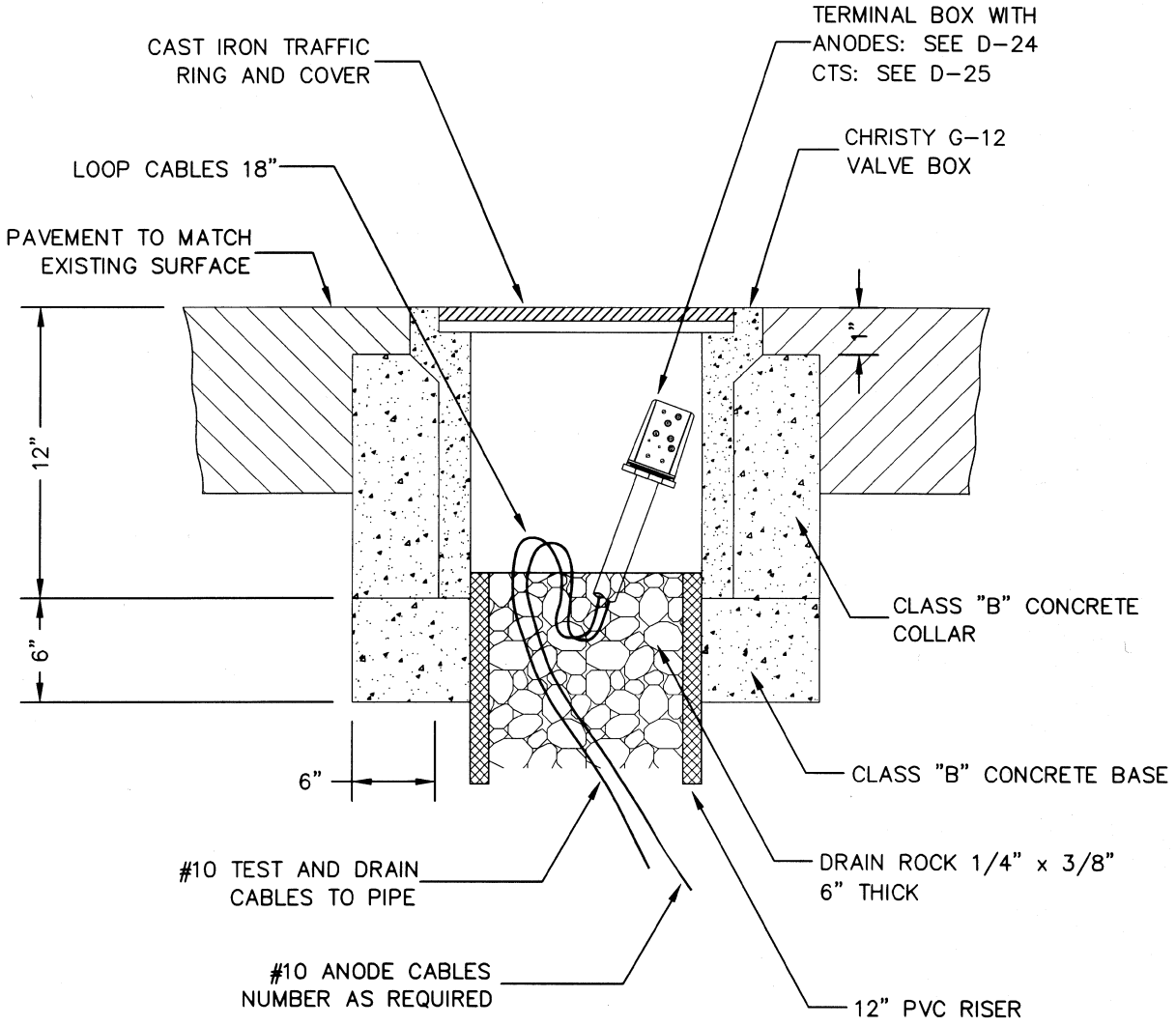

Revision	Date	Approved
Drawn : QT	Date : 05-27-99	
Checked : RK	Scale : NTS	

APPROVED BY: ASSISTANT PUBLIC WORKS DIRECTOR

06-29-99 DATE | 03-31-01 EXP. | 27089 R.C.E. NO.

REGISTERED PROFESSIONAL ENGINEER TIMOTHY Y. TOM No. 27089 EXP. 03-31-01 STATE OF CALIFORNIA

CITY OF MOUNTAIN VIEW
DEPARTMENT OF PUBLIC WORKS
STANDARD DETAIL

STANDARD TEST AND ANODE JUNCTION BOX

FILE NO. D-23

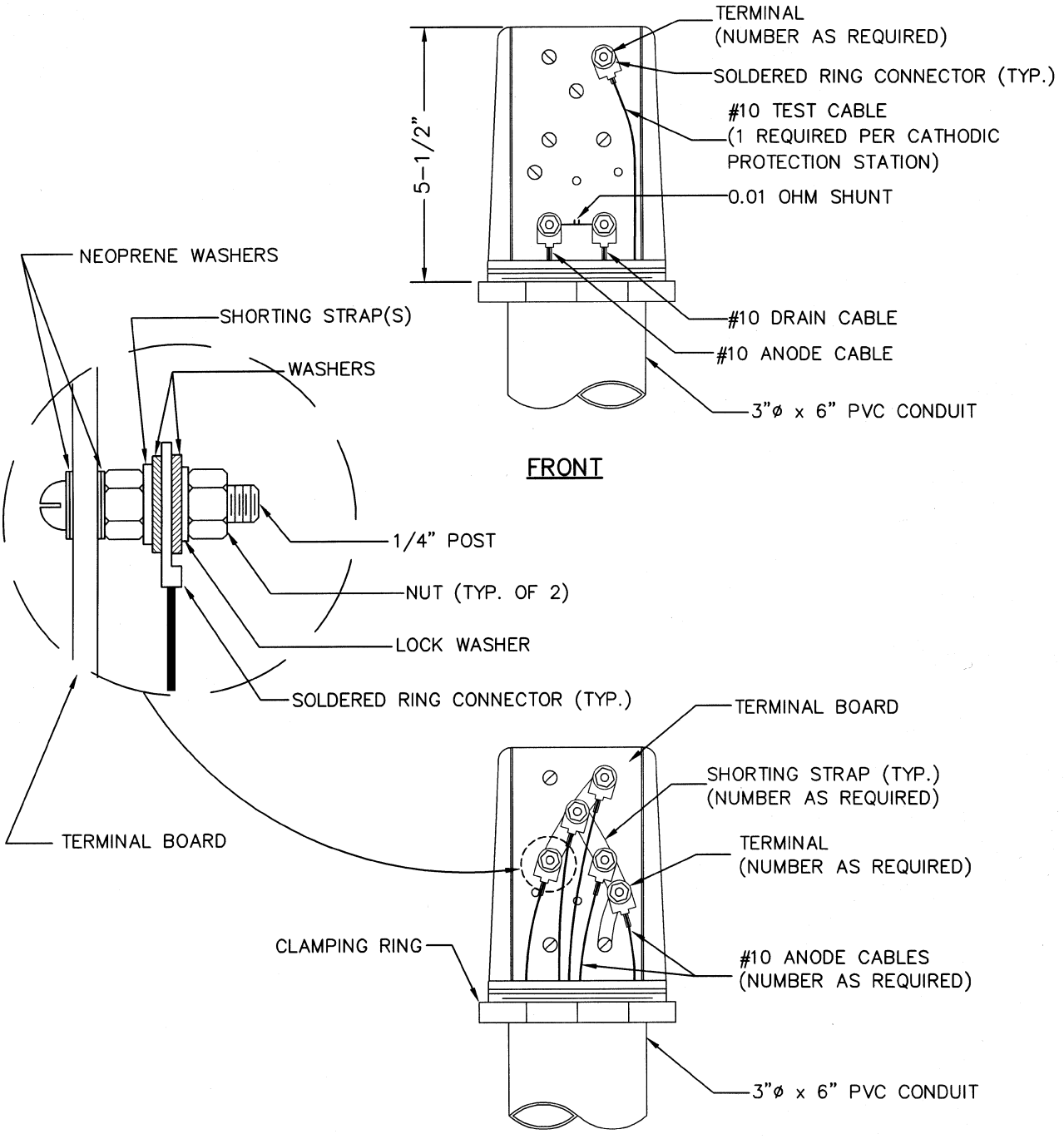

Revision	Date	Approved
Drawn : QT	Date : 05-27-99	
Checked : RK	Scale : NTS	

APPROVED BY: ASSISTANT PUBLIC WORKS DIRECTOR

06-29-99 DATE | 03-31-01 EXP. | 27089 R.C.E. NO.

REGISTERED PROFESSIONAL ENGINEER TIMOTHY Y. OTA No. 27089 EXP. 03-31-01 CIVIL STATE OF CALIFORNIA

CITY OF MOUNTAIN VIEW
DEPARTMENT OF PUBLIC WORKS
STANDARD DETAIL

STANDARD ANODE TERMINAL BOX
(COVER NOT SHOWN)

FILE NO. D-24

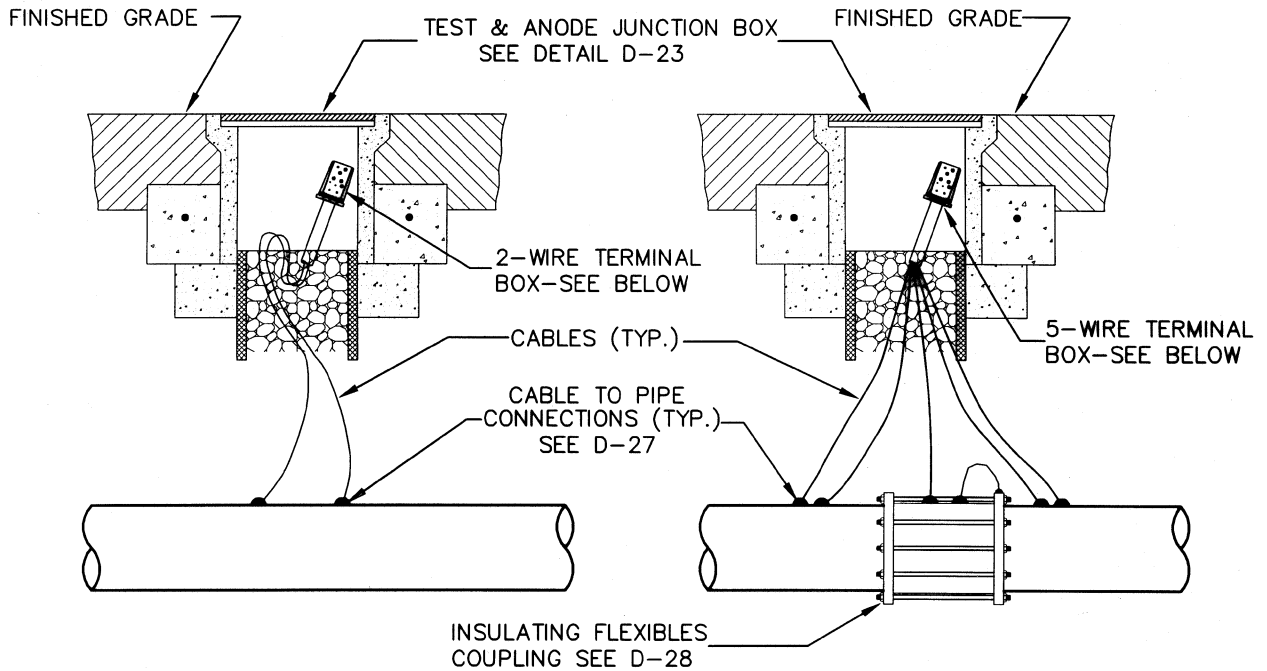

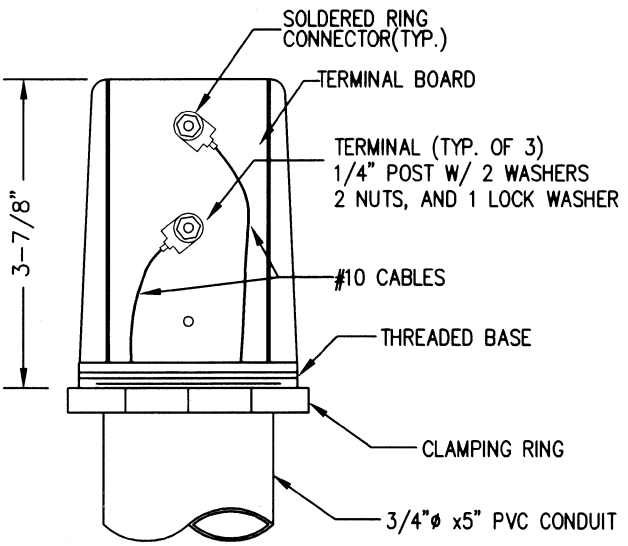

2-WIRE TERMINAL BOX

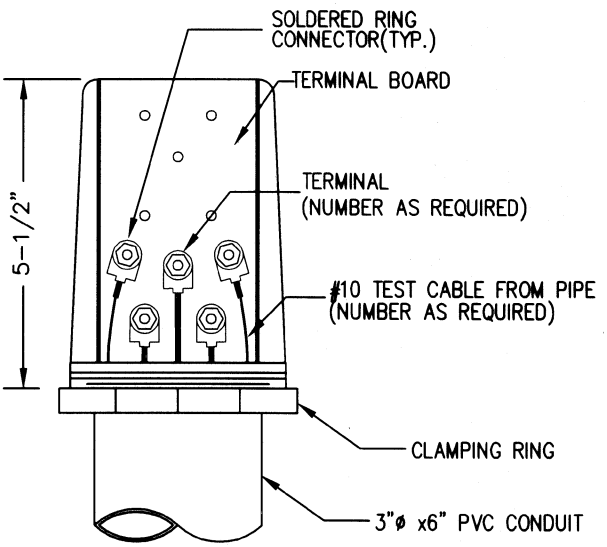

5-WIRE TERMINAL BOX

Revision	Date	Approved
Drawn : QT	Date : 05-21-99	
Checked : RK	Scale : NTS	

APPROVED BY:

ASSISTANT PUBLIC WORKS DIRECTOR

06-29-99 DATE | 03-31-01 EXP. | 27089 R.C.E. NO.

REGISTERED PROFESSIONAL ENGINEER TIMOTHY Y. TO No. 27089 EXP. 03-31-01 STATE OF CALIFORNIA

CITY OF MOUNTAIN VIEW
DEPARTMENT OF PUBLIC WORKS
STANDARD DETAIL

STANDARD TEST STATION & TERMINAL BOX
(BOX COVERS NOT SHOWN)

FILE NO. D-25

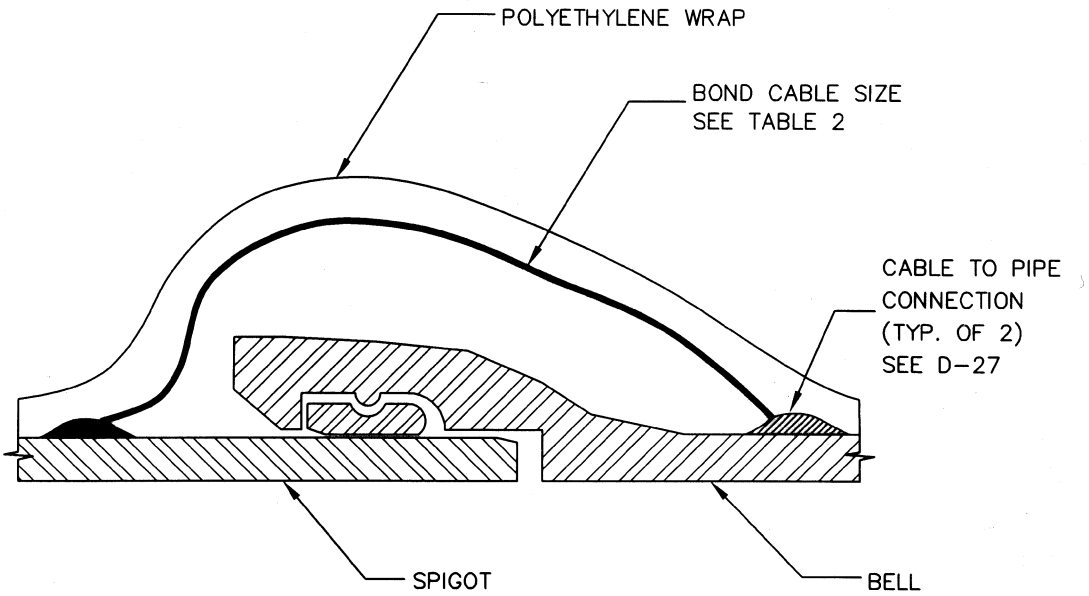

NOTE:

BOND DETAIL IS USED FOR MECHANICAL AND PUSH-ON JOINTS

TABLE 2

PIPE SIZE (INCHES)	BOND SIZE (AWG No.)
4 TO 10	#6
12 TO 16	#4
20 TO 24	#2
30 TO 42	#1

Revision	Date	Approved
Drawn : QT	Date : 05-18-99	
Checked : RK	Scale : NTS	

APPROVED BY: ASSISTANT PUBLIC WORKS DIRECTOR

06-29-99 DATE | 03-31-01 EXP. | 27089 R.C.E. NO.

REGISTERED PROFESSIONAL ENGINEER TIMOTHY Y. TO No. 27089 EXP. 03-31-01 CIVIL STATE OF CALIFORNIA

CITY OF MOUNTAIN VIEW
DEPARTMENT OF PUBLIC WORKS
STANDARD DETAIL

STANDARD JOINT BOND FOR DUCTILE IRON PIPE

FILE NO. D-26

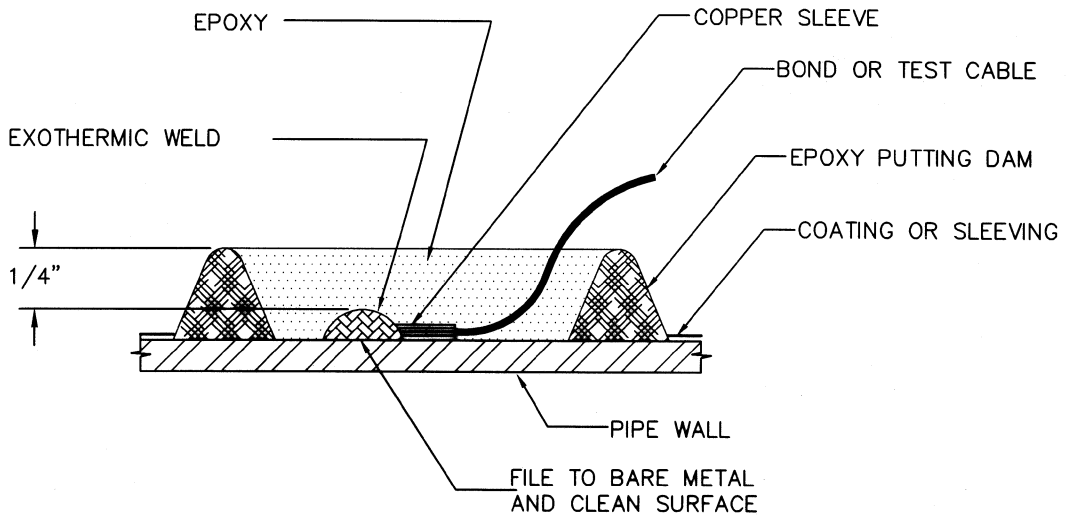

BELOW GROUND

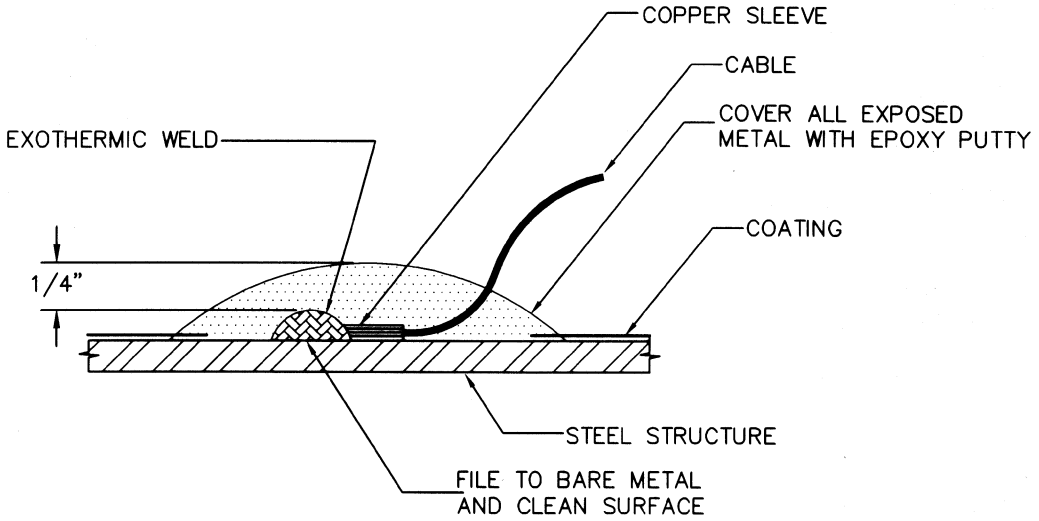

ABOVE GROUND AND VERTICAL WELDS

Revision	Date	Approved
Drawn : QT	Date : 05-23-99	
Checked : RK	Scale : NTS	

APPROVED BY

ASSISTANT PUBLIC WORKS DIRECTOR

06-29-99 DATE | 03-31-01 EXP. | 27089 R.C.E. NO.

REGISTERED PROFESSIONAL ENGINEER TIMOTHY Y. OTA No. 27089 EXP. 03-31-01 STATE OF CALIFORNIA

CITY OF MOUNTAIN VIEW
DEPARTMENT OF PUBLIC WORKS
STANDARD DETAIL

STANDARD CABLE TO PIPE CONNECTION

FILE NO. D-27

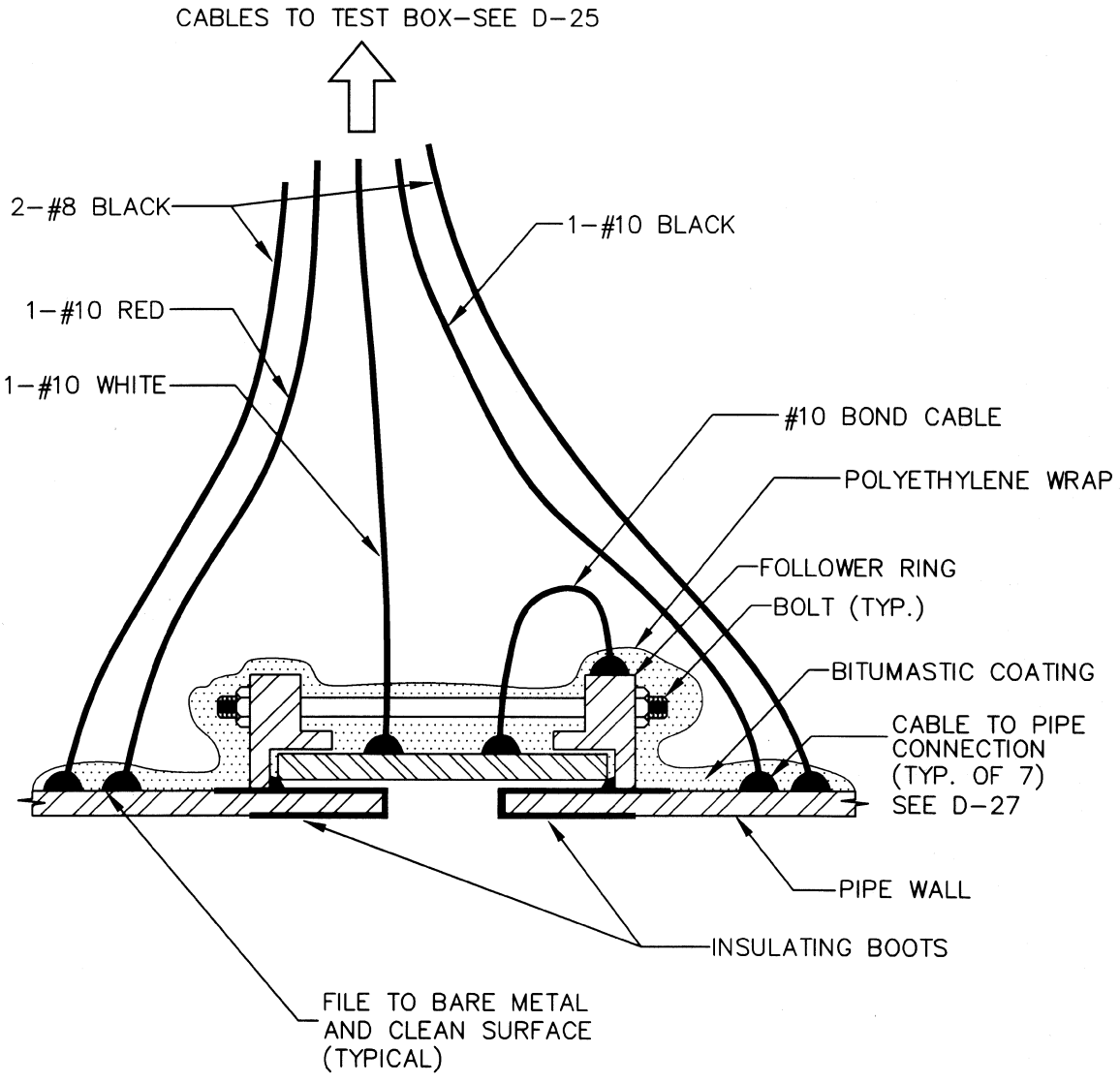

Revision	Date	Approved
Drawn : QT	Date : 05-18-99	
Checked : RK	Scale : NTS	

APPROVED BY:

ASSISTANT PUBLIC WORKS DIRECTOR

REGISTERED PROFESSIONAL ENGINEER
TIMOTHY Y. AO
No. 27089
EXP. 03-31-01
CIVIL
STATE OF CALIFORNIA

06-29-99	03-31-01	27089
DATE	EXP.	R.C.E. NO.

CITY OF MOUNTAIN VIEW
DEPARTMENT OF PUBLIC WORKS
STANDARD DETAIL

STANDARD
INSULATING FLEXIBLE COUPLING SECTION

FILE NO. D–28

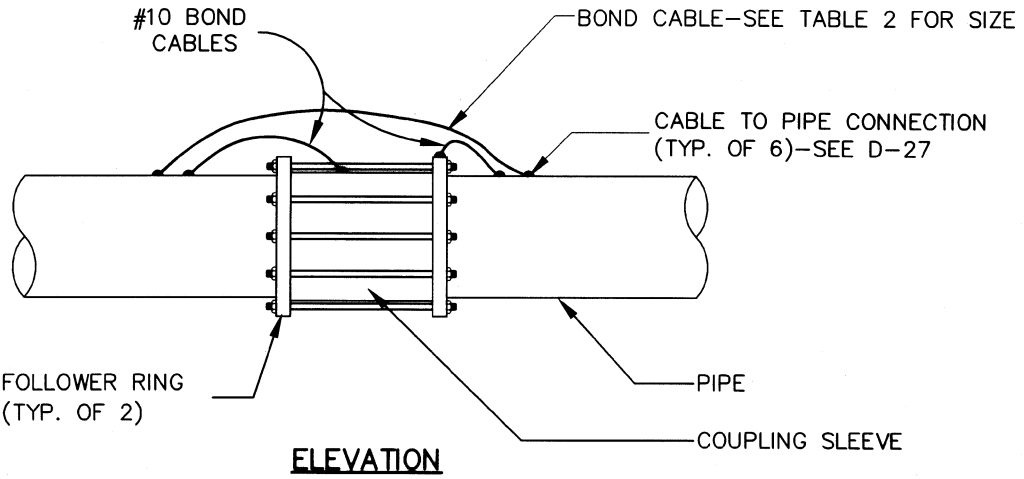

ELEVATION

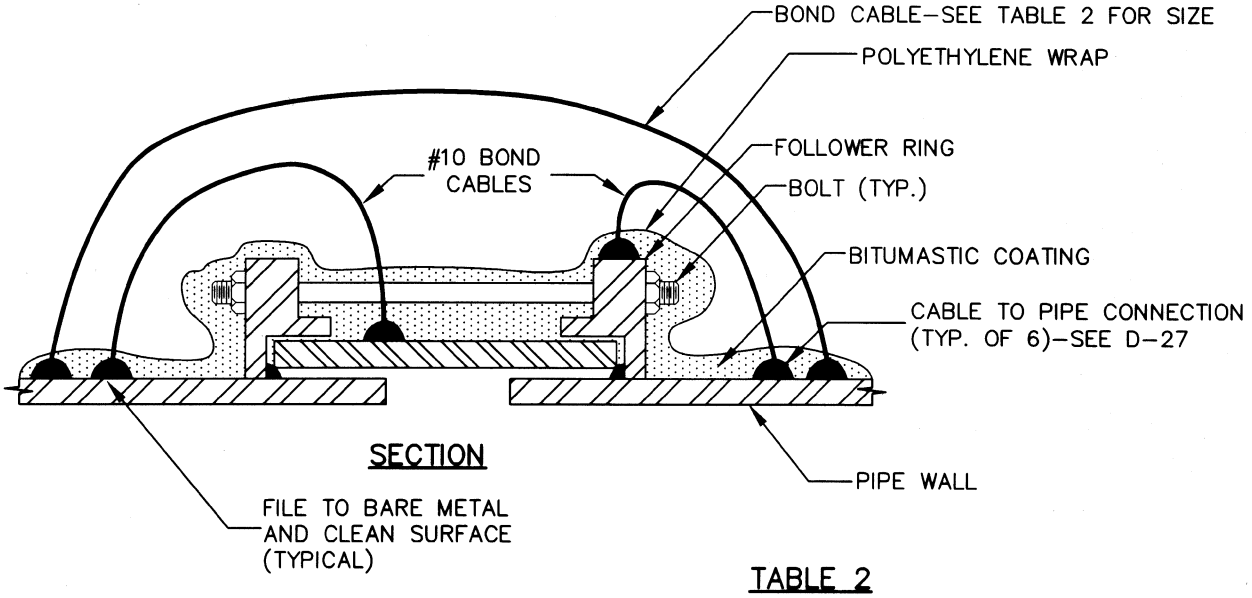

SECTION

TABLE 2

BOND SIZE

PIPE SIZE (INCHES)	BOND SIZE (AWG No.)
4 TO 10	#6
12 TO 16	#4
20 TO 24	#2
30 TO 42	#1

Revision	Date	Approved
Drawn : QT	Date : 05-18-99	
Checked : RK	Scale : NTS	

APPROVED BY: REGISTERED PROFESSIONAL ENGINEER TIMOTHY Y. LO No. 27089 EXP. 03-31-01 STATE OF CALIFORNIA

ASSISTANT PUBLIC WORKS DIRECTOR

06-29-99	03-31-01	27089
DATE	EXP.	R.C.E. NO.

CITY OF MOUNTAIN VIEW
DEPARTMENT OF PUBLIC WORKS
STANDARD DETAIL

STANDARD
FLEXIBLE COUPLING BOND

FILE NO. D–29

TABLE II:

NEW COPPER SERVICE LINES
ANODE REQUIREMENTS FOR WRAPPED PIPE
(WITH KNOWN SOIL RESISTIVITY)

SIZE OF SERVICE (INCHES)	SOIL RESISTIVITY (Ohm-m)				
	LESS THAN 10	11 TO 30	31 TO 50	51 TO 70	71 TO 120
1/2 & 5/8	1 # 12	1 # 12	1 # 12	1 # 17	1 # 17
1, 3/4 & 1-1/4	1 # 12	1 # 12	1 # 17	1 # 17	1 # 17
1-1/2 & 2	1 # 12	1 # 17	1 # 17	1 # 17	1 # 17
2-1/2 & 3	1 # 17	1 # 17	1 # 17	1 # 17	2 # 17

NOTES:

1. USE MAGNESIUM ANODES PER STANDARD DETAILS FOR VALUES BELOW DOUBLE LINE, AND ZINC ANODES PER STANDARD DETAILS FOR VALUES ABOVE DOUBLE LINES.

2. IF SOIL RESISTIVITY IS NOT DETERMINED FOR THE LOCATION, USE (1) 17# MAGNESIUM ANODE FOR SERVICES 1-1/2" AND SMALLER, AND (2) 17# MAGNESIUM ANODES FOR SERVICES LARGER THAN 2" AND UP TO 50 FEET LONG.

3. TABULAR VALUES ARE BASED ON 50 FEET OF SERVICE LINE OR LESS. FOR SERVICE LINES FROM 50 FEET TO 100 FEET LONG, USE 2 TIMES THE TABULAR VALUE.

Revision	Date	Approved
Drawn : QT	Date : 05-[illegible]-99	
Checked : RK	Scale : NTS	

APPROVED BY: [illegible]
ASSISTANT PUBLIC WORKS DIRECTOR

REGISTERED PROFESSIONAL ENGINEER TIMOTHY Y. [illegible] No. 27089 EXP. 03-31-01 CIVIL STATE OF CALIFORNIA

06-29-99	03-31-01	27089
DATE	EXP.	R.C.E. NO.

CITY OF MOUNTAIN VIEW
DEPARTMENT OF PUBLIC WORKS
STANDARD DETAIL

STANDARD COPPER SERVICE LINE
ANODE REQUIREMENTS
CORROSION CONTROL DETAILS
(TABLE II)

FILE NO. D-30

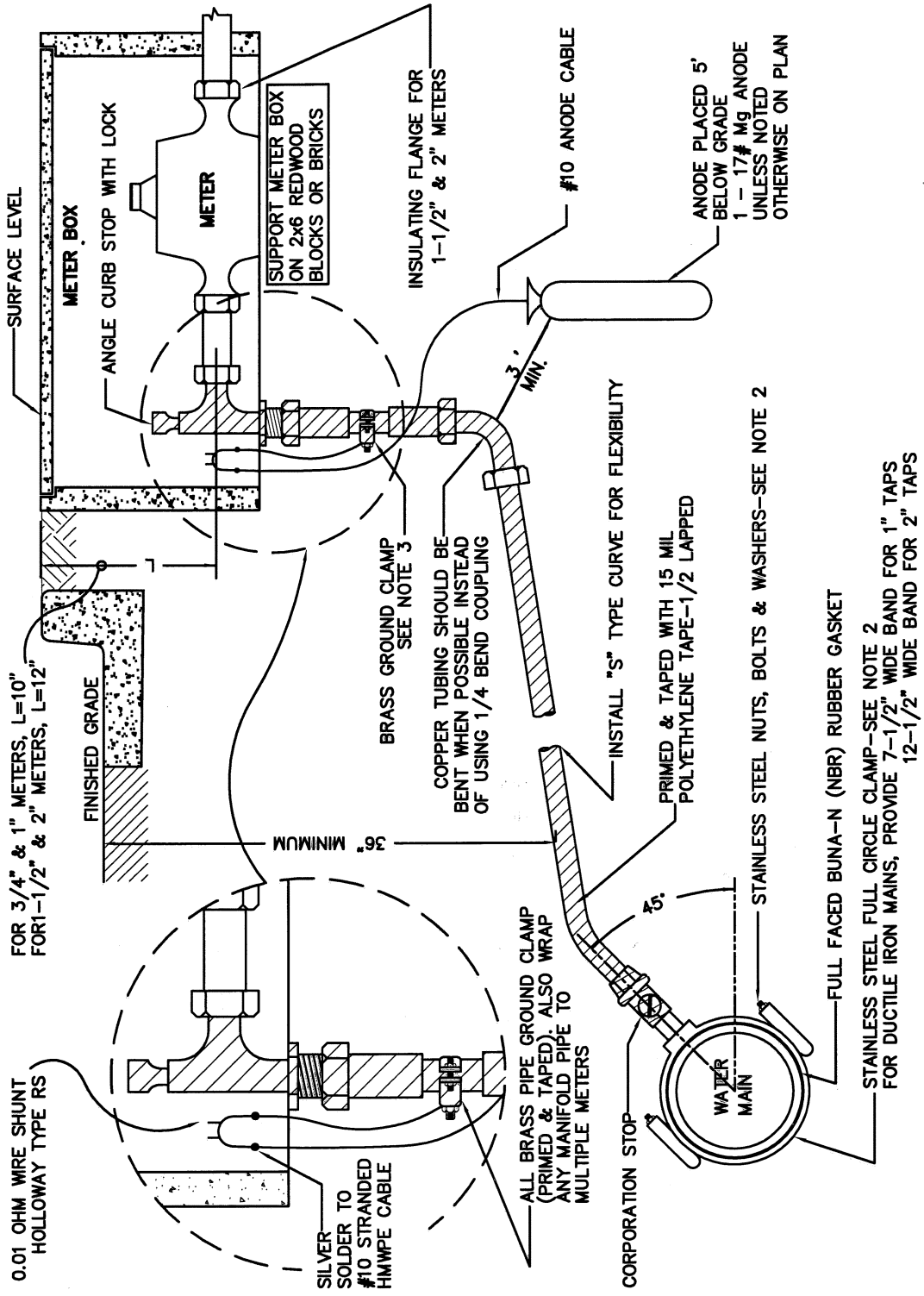

NOTES:

1. SEE STANDARD DETAIL D-1 FOR LOCATION PLAN.
2. FIELD APPLY BITUMASTIC 50 ON ALL BARE METAL AND COVER WITH POLYETHYLENE ENCASEMENT IN ACCORDANCE WITH AWWA STANDARD C105.
3. USE CLAMP FOR COUPLING TYPE METER. ATTACH SHUNT TO SERVICE WITH SOLDER TYPE TERMINAL RING TO BOLT FOR FLANGED METERS.

Revision	Date	Approved

Drawn : QT | Date : 02-25-05

Checked : RK | Scale : NTS

APPROVED BY:

ASSISTANT PUBLIC WORKS DIRECTOR

02-25-05	03-31-07	27089
DATE	EXP.	R.C.E. NO.

REGISTERED PROFESSIONAL ENGINEER TIMOTHY Y. QUACH No. 27089 EXP. 03-31-07 STATE OF CALIFORNIA

CITY OF MOUNTAIN VIEW
DEPARTMENT OF PUBLIC WORKS
STANDARD DETAIL

STANDARD 2" OR SMALLER COPPER SERVICE INSTALLATION – D.I.P. MAIN CORROSION CONTROL DETAILS

FILE NO. D-31

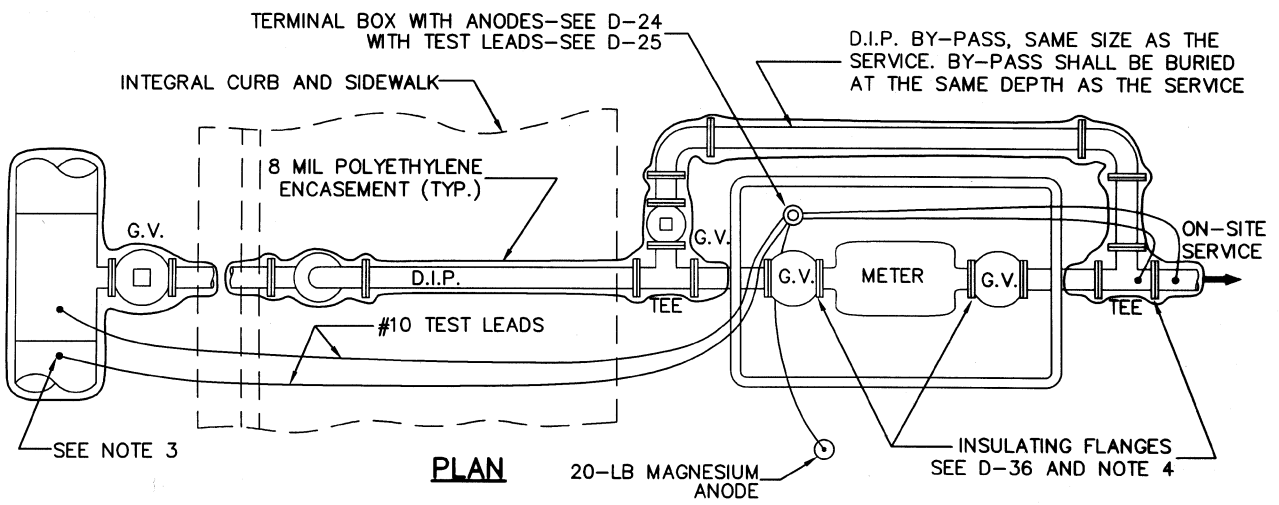

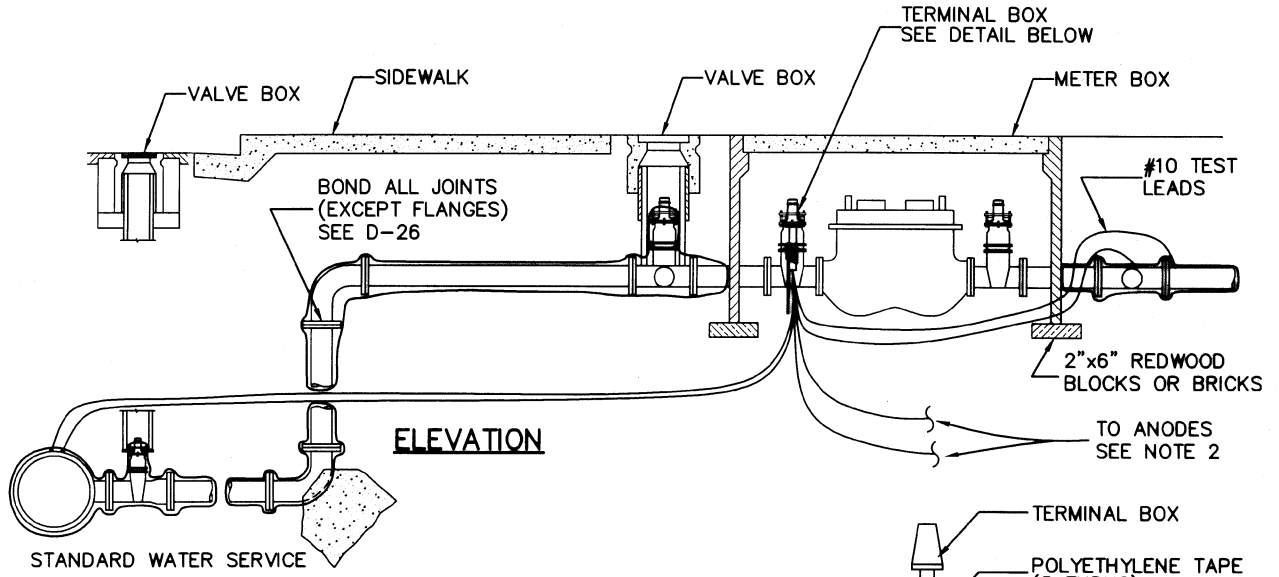

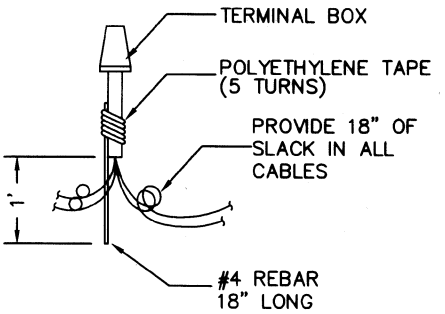

NOTES:

1. FOR METER INSTALLATION SEE STANDARD D-3
2. PROVIDE 2-WIRE TEST STATION FOR SERVICES WHICH ARE ATTACHED TO OLD A/C OR C.I. PIPE. PROVIDE CATHODIC PROTECTION IN ACCORDANCE WITH PLANS AND STANDARD D-18 FOR NEW DUCTILE IRON PIPE.
3. CONNECT TEST LEAD TO SERVICE PIPE IF WATER MAIN IS A.C.
4. ADD INSULATED FLANGES TO ISOLATE METER ONLY IF THE INSTALLATION DOES NOT REQUIRE CATHODIC PROTECTION.

Revision	Date	Approved
Drawn : QT	Date : 05-18-99	
Checked : RK	Scale : NTS	

APPROVED BY: ASSISTANT PUBLIC WORKS DIRECTOR

06-29-99 DATE | 03-31-01 EXP. | 27089 R.C.E. NO.

REGISTERED PROFESSIONAL ENGINEER TIMOTHY Y. O'HARA No. 27089 EXP. 03-31-01 STATE OF CALIFORNIA

CITY OF MOUNTAIN VIEW
DEPARTMENT OF PUBLIC WORKS
STANDARD DETAIL

STANDARD 4" OR LARGER METER INSTALLATION
CORROSION CONTROL DETAILS

FILE NO. D-31A

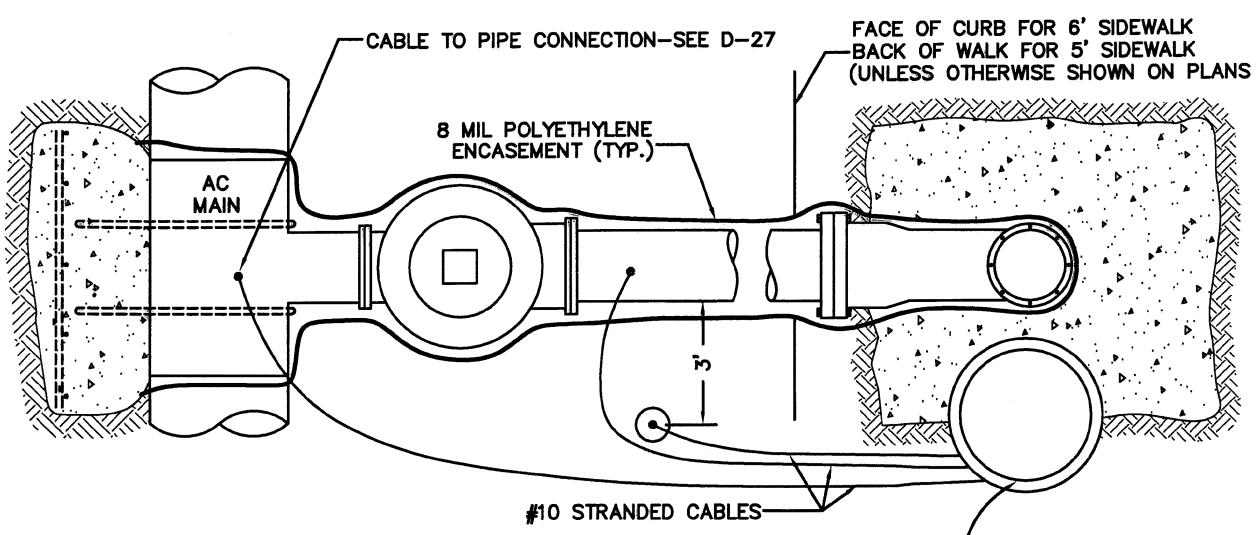

PLAN

NOTE: BOND ALL JOINTS (EXCEPT FLANGES) – SEE D–26

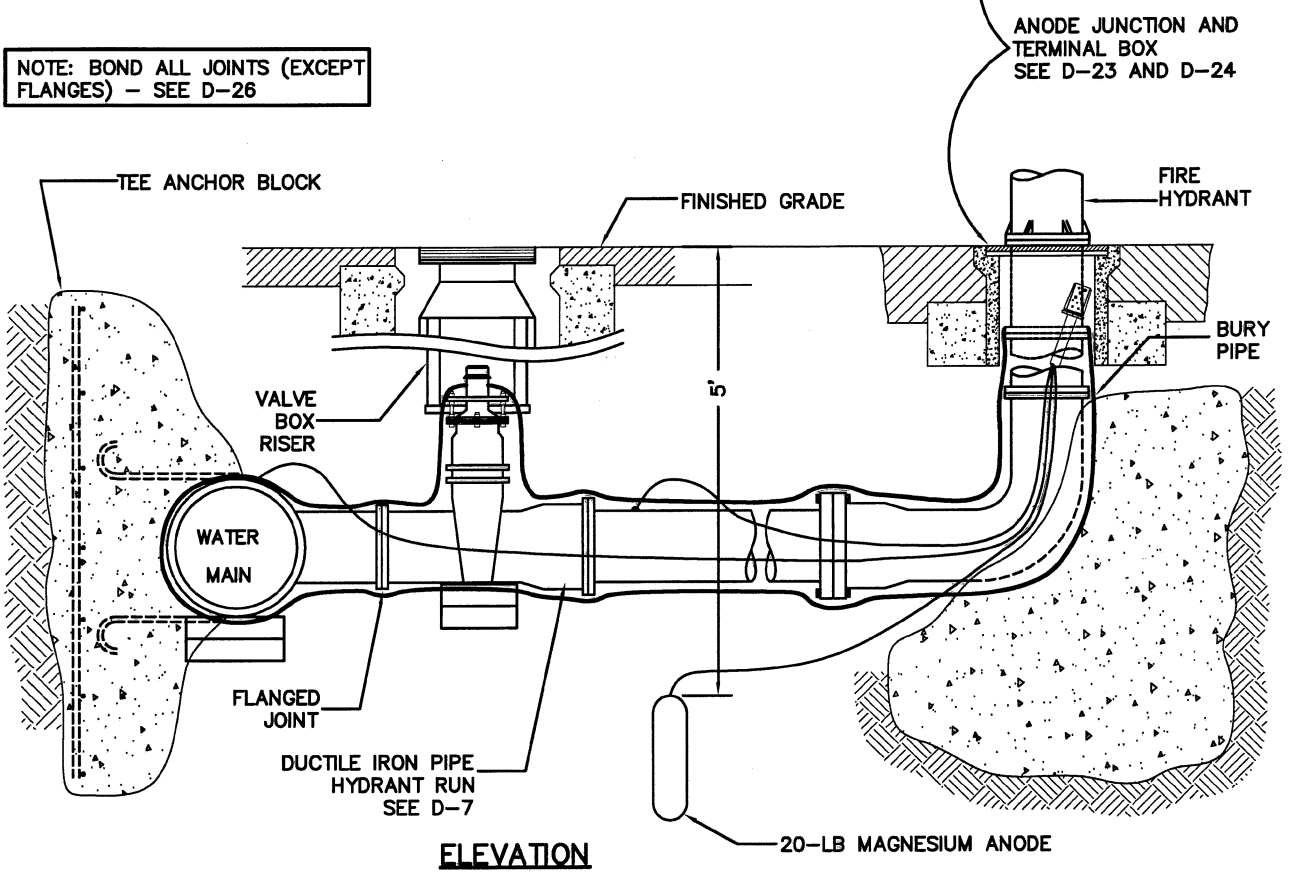

ELEVATION

Revision	Date	Approved

Drawn : QT | Date : 02–25–05

Checked : RK | Scale : NTS

APPROVED BY:

ASSISTANT PUBLIC WORKS DIRECTOR

REGISTERED PROFESSIONAL ENGINEER TIMOTHY Y. LO No. 27089 EXP. 03-31-07 STATE OF CALIFORNIA

02–25–05	03–31–07	27089
DATE	EXP.	R.C.E. NO.

CITY OF MOUNTAIN VIEW
DEPARTMENT OF PUBLIC WORKS
STANDARD DETAIL

STANDARD FIRE HYDRANT INSTALLATION
CORROSION CONTROL DETAILS –ACP MAINS

FILE NO. D–31C

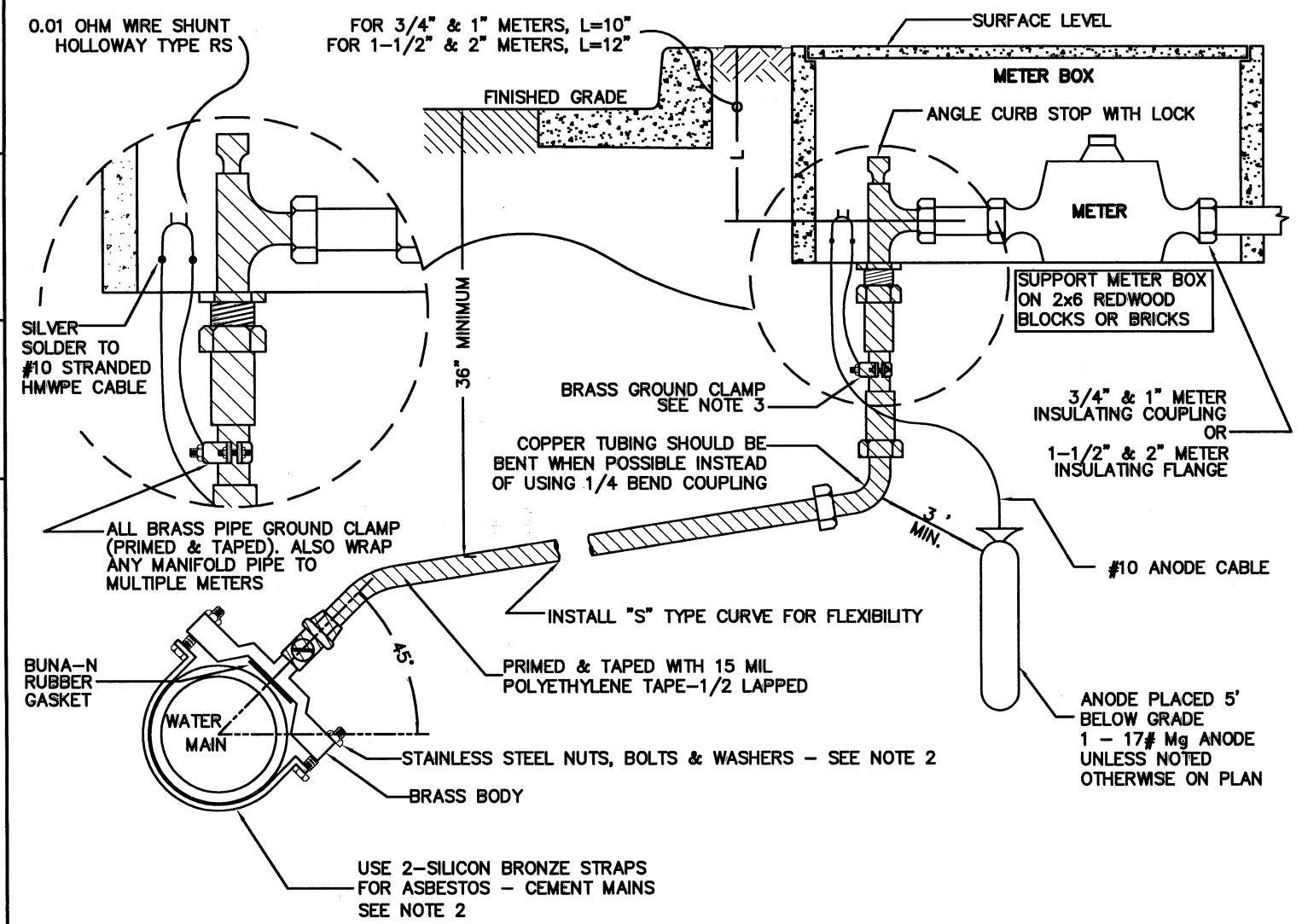

NOTES:
1. SEE STANDARD DETAIL D-1 FOR LOCATION PLAN.
2. FIELD APPLY BITUMASTIC 50 ON ALL BARE METAL AND COVER WITH POLYETHYLENE ENCASEMENT IN ACCORDANCE WITH AWWA STANDARD C105.
3. USE CLAMP FOR COUPLING TYPE METER. ATTACH SHUNT TO SERVICE WITH SOLDER TYPE TERMINAL RING TO BOLT FOR FLANGED METERS.

CITY OF MOUNTAIN VIEW
DEPARTMENT OF PUBLIC WORKS
STANDARD DETAIL

STANDARD 2" OR SMALLER
COPPER SERVICE INSTALLATION-ACP MAINS
CORROSION CONTROL DETAILS

FILE NO. D-32

Revision	Date	Approved
Drawn : QT	Date : 02-25-05	
Checked : RK	Scale : NTS	

APPROVED BY:
ASSISTANT PUBLIC WORKS DIRECTOR
02-25-05 DATE
03-31-07 EXP.
27089 R.C.E. NO.

REGISTERED PROFESSIONAL ENGINEER
TIMOTHY Y. LEE
No. 27089
EXP. 03-31-07
STATE OF CALIFORNIA

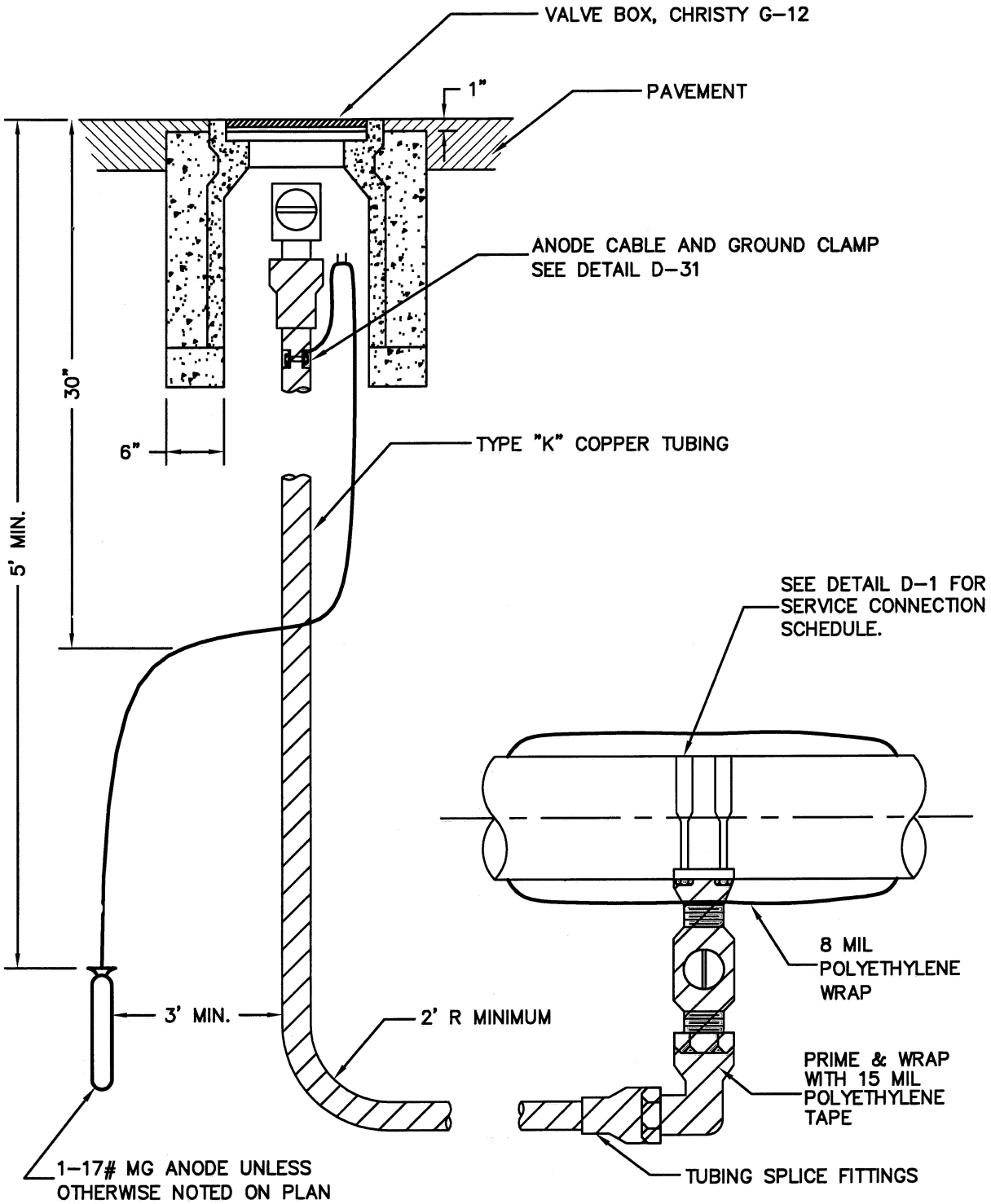

Revision	Date	Approved

Drawn : QT | Date : 02-25-05

Checked : RK | Scale : NTS

APPROVED BY:

ASSISTANT PUBLIC WORKS DIRECTOR

02-25-05	03-31-07	27089
DATE	EXP.	R.C.E. NO.

REGISTERED PROFESSIONAL ENGINEER TIMOTHY YOUNG No. 27089 EXP. 03-31-07 STATE OF CALIFORNIA

CITY OF MOUNTAIN VIEW
DEPARTMENT OF PUBLIC WORKS
STANDARD DETAIL

2" STANDARD BLOW-OFF VALVE
CATHODIC PROTECTION

FILE NO. D-33

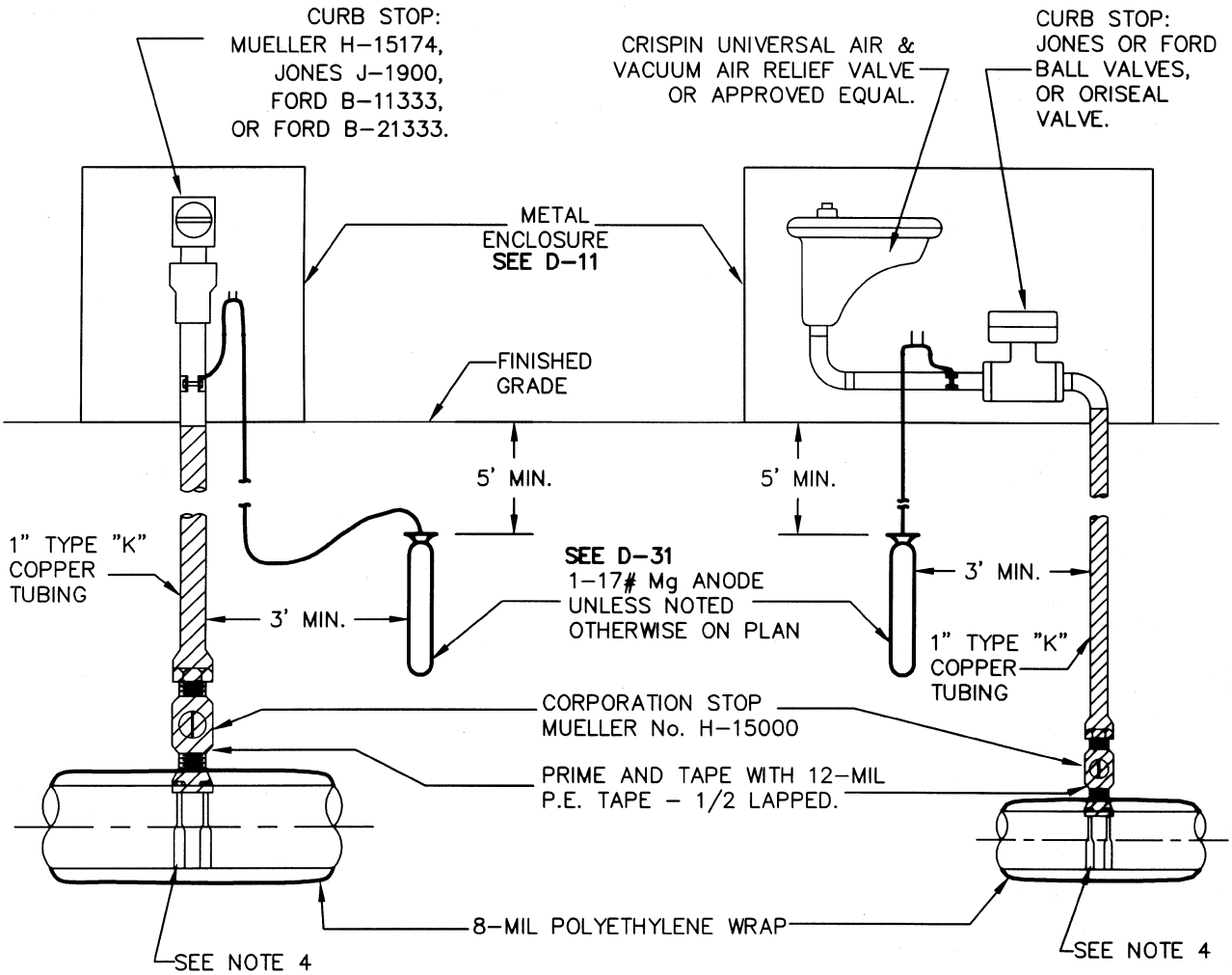

MANUAL AIR RELIEF VALVE **AUTOMATIC AIR & VACUUM VALVE**

NOTES:

1. CONNECTION TO WATER MAIN SHALL CONFORM TO STANDARD DETAILS AND SPECIFICATIONS.
2. USE SAME DIAMETER SEAMLESS COPPER TUBING AS REQUIRED SIZE OF AIR & VACUUM RELIEF VALVE.
3. AIR RELIEF VALVE AND CURB STOP SHALL BE PLACED IN BOX SUCH THAT THE WALL OF THE BOX WILL NOT INTERFERE WITH THE INSTALLATION AND REMOVAL OF THE VALVES.
4. FOR A/C : DOUBLE STRAP SERVICE CLAMP.
   FOR PVC : SERVICE SADDLE APPROVED BY ENGINEER.
   FOR DIP, CIP : SEE DETAILS IN D-31

Revision	Date	Approved
Drawn : QT	Date : 05-20-99	
Checked : RK	Scale : NTS	

APPROVED BY: REGISTERED PROFESSIONAL ENGINEER TIMOTHY Y. OTO No. 27089 EXP. 03-31-01 CIVIL STATE OF CALIFORNIA

ASSISTANT PUBLIC WORKS DIRECTOR

06-29-99	03-31-01	27089
DATE	EXP.	R.C.E. NO.

CITY OF MOUNTAIN VIEW
DEPARTMENT OF PUBLIC WORKS
STANDARD DETAIL

STANDARD AIR RELIEF VALVE
CATHODIC PROTECTION

FILE NO. D-34

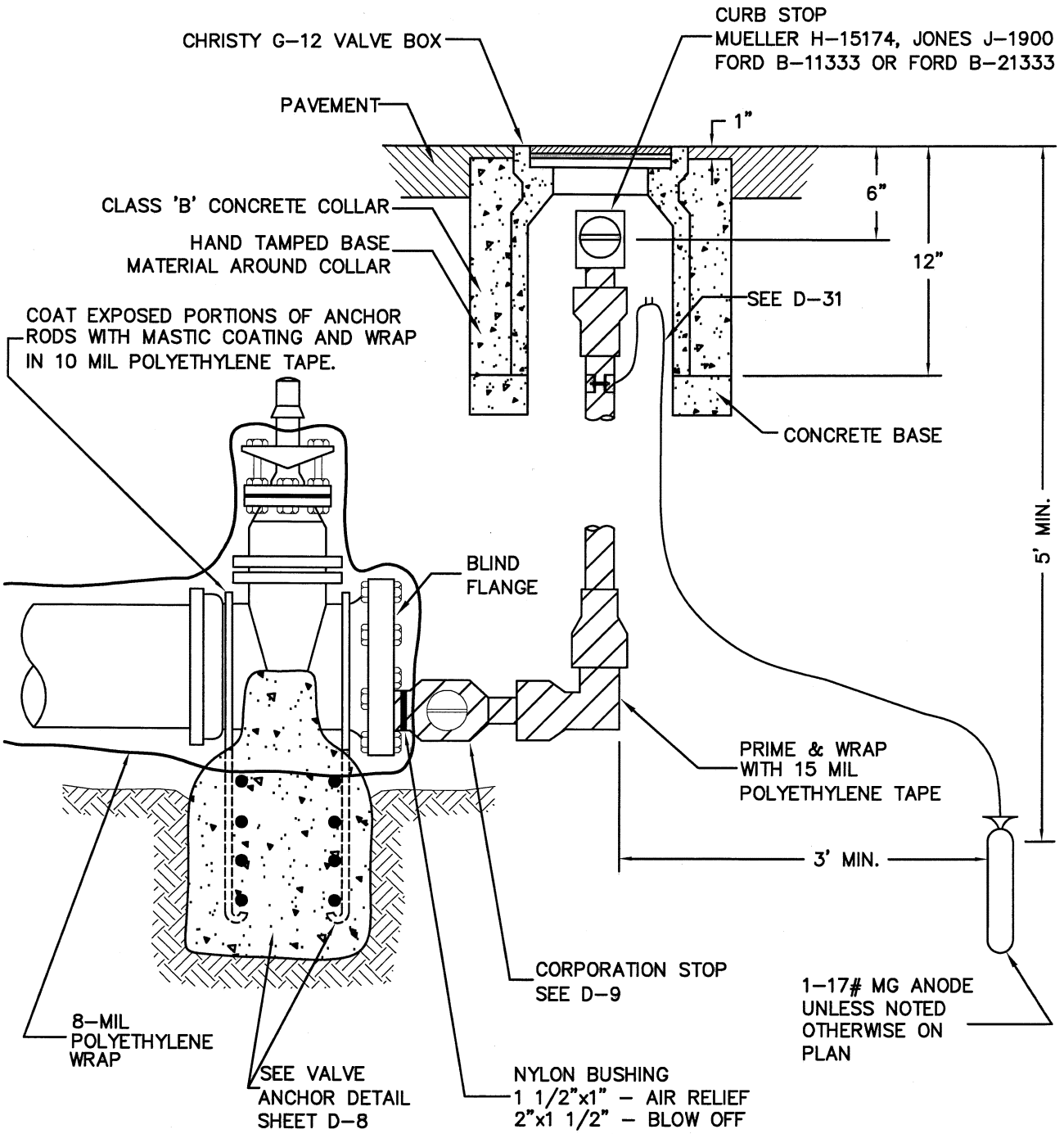

NOTE:

INSTALL AIR RELIEF OR BLOW-OFF ONLY AT LOCATIONS DESIGNATED ON THE PLANS.

Revision	Date	Approved
Drawn : QT	Date : 02-25-05	
Checked : RK	Scale : NTS	

APPROVED BY:

ASSISTANT PUBLIC WORKS DIRECTOR

02-25-05	03-31-07	27089
DATE	EXP.	R.C.E. NO.

REGISTERED PROFESSIONAL ENGINEER TIMOTHY Y. FUNG No. 27089 EXP. 03-31-07 STATE OF CALIFORNIA

CITY OF MOUNTAIN VIEW
DEPARTMENT OF PUBLIC WORKS
STANDARD DETAIL

STANDARD BLIND FLANGED GATE VALVE AT END OF MAIN CATHODIC PROTECTION

FILE NO. D-35

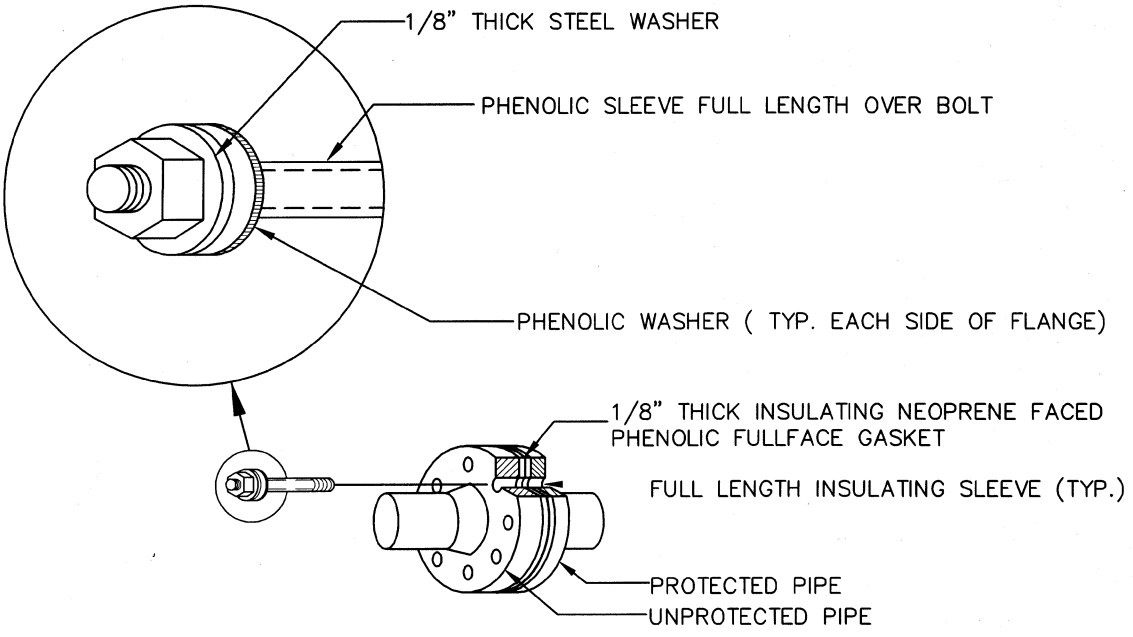

INSULATING FLANGE

Revision	Date	Approved
Drawn : QT	Date : 05-22-99	
Checked : RK	Scale : NTS	

APPROVED BY

ASSISTANT PUBLIC WORKS DIRECTOR

06-29-99 DATE | 03-31-01 EXP. | 27089 R.C.E. NO.

REGISTERED PROFESSIONAL ENGINEER TIMOTHY Y. TO No. 27089 EXP. 03-31-01 STATE OF CALIFORNIA

CITY OF MOUNTAIN VIEW
DEPARTMENT OF PUBLIC WORKS
STANDARD DETAIL

STANDARD INSULATING FLANGE

FILE NO. D-36

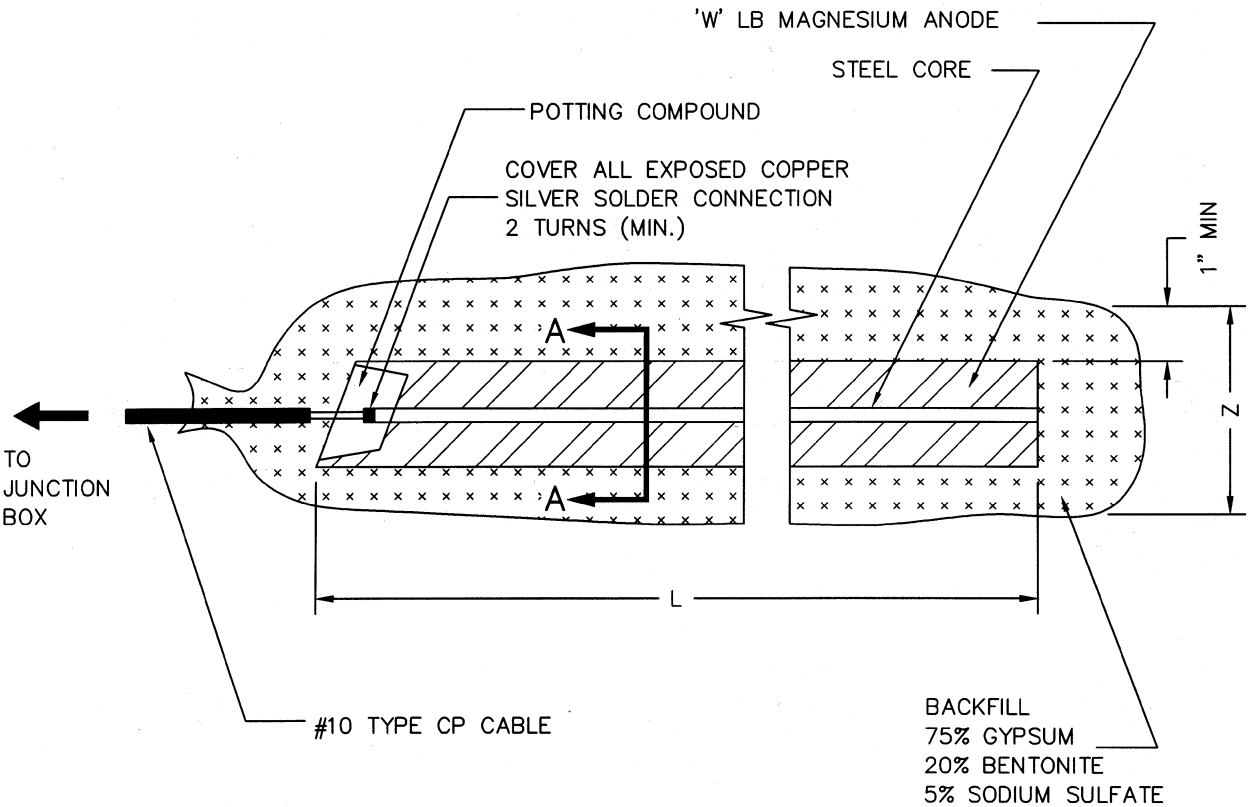

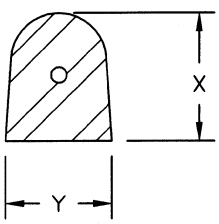

SECTION A–A

W (LB)	17	60	20
X (IN)	3	4 1/2	3
Y (IN)	2 3/4	4 3/4	2 3/4
Z (IN)	5	7	5
L (IN)	50	59 3/4	59 3/4

Revision	Date	Approved
Drawn : QT	Date : 05-22-99	
Checked : RK	Scale : NTS	

APPROVED BY

REGISTERED PROFESSIONAL ENGINEER
TIMOTHY Y. TO
No. 27089
EXP. 03-31-01
CIVIL
STATE OF CALIFORNIA

ASSISTANT PUBLIC WORKS DIRECTOR

06-29-99	03-31-01	27089
DATE	EXP.	R.C.E. NO.

CITY OF MOUNTAIN VIEW
DEPARTMENT OF PUBLIC WORKS
STANDARD DETAIL

STANDARD MAGNESIUM ANODE

FILE NO. D–37

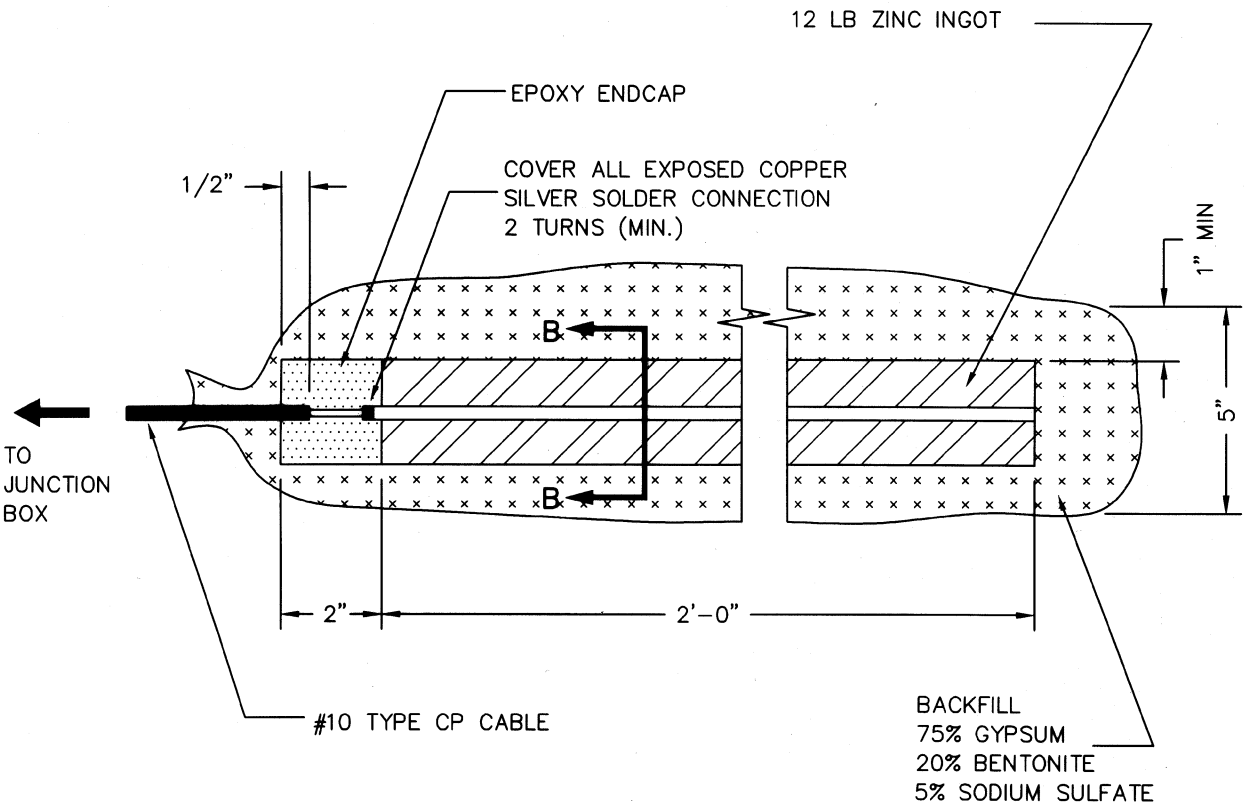

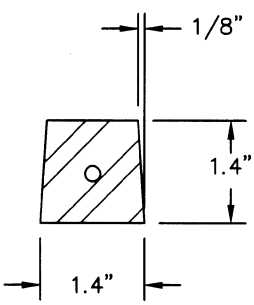

SECTION B-B

Revision	Date	Approved
Drawn : QT	Date : 05-10-99	
Checked : RK	Scale : NTS	

APPROVED BY

REGISTERED PROFESSIONAL ENGINEER
TIMOTHY Y. TO
No. 27089
EXP. 03-31-01
CIVIL
STATE OF CALIFORNIA

ASSISTANT PUBLIC WORKS DIRECTOR

06-29-99	03-31-01	27089
DATE	EXP.	R.C.E. NO.

CITY OF MOUNTAIN VIEW
DEPARTMENT OF PUBLIC WORKS
STANDARD DETAIL

STANDARD 12-LB ZINC ANODE

FILE NO. D-38